City of Bryan - Purchasing Department
Bid Tabulation for #14-068: City Job #332-411-611-425-DE-1401
1st Street Utility Street Rehabilitation
Bid Open Date: September 10, 2014 @ 2:00 p.m.

All bids submitted are reflected on this bid tab sheet. However, the listing of a bid should not be construed as any indication that the City accepts such bid as responsive. The City will notify the successful bidder upon award of contract.	Elliott Construction, LLC	Brazos Paving	Texcon General Contractors
Proposal Cover Page (Y/N)	Y	Y	Y
Executed 5% Bidder's Bond or Cashier's Check (Y/N)	Y	Y	Y
Felony Conviction Notification (Y/N)	Y	Y	Y
Certification of Bid (Y/N)	Y	Y	Y
Acknowledgement of Addendum 1 (Y/N)	Y	Y	Y
Statement of Qualifications & References (Y/N)	Y	Y	Y
Franchise Tax Certificate (Corporations Only) (Y/N)	Y	Y	Y
COMPLETE BID PACKAGE (Y/N)	Y	Y	Y

ITEM	APPROX QTY	UNIT	ITEM DESCRIPTION	Unit Price	Total	Unit Price	Total	Unit Price	Total
A. GENERAL ITEMS									
1	1	LS	Mobilization, setup, & project overhead for all equipment, work on project, including related items & appurtenances, comlplete in place	$21,000.00	$21,000.00	$39,540.00	$39,540.00	$58,000.00	$58,000.00
2	1	LS	Traffic control, including all signage, temporary paving, cones, striping, buttons and related items & appurtenances, complete in place.	$7,000.00	$7,000.00	$4,500.00	$4,500.00	$20,000.00	$20,000.00
3	1	LS	Field locate existing utilities & service lines for construction of the proposed improvements including related items & appurtenances, complete in place	$3,500.00	$3,500.00	$1,800.00	$1,800.00	$10,000.00	$10,000.00
4	5	EA	Durham 1092 single mailbox, product number N1026013M including related items & appurtenances, complete in place.	$560.00	$2,800.00	$420.00	$2,100.00	$600.00	$3,000.00
TOTAL SECTION A - GENERAL				$34,300.00		$47,940.00		$91,000.00	

City of Bryan - Purchasing Department
Bid Tabulation for #14-068: City Job #332-411-611-425-DE-1401
1st Street Utility Street Rehabilitation
Bid Open Date: September 10, 2014 @ 2:00 p.m.

All bids submitted are reflected on this bid tab sheet. However, the listing of a bid should not be construed as any indication that the City accepts such bid as responsive. The City will notify the successful bidder upon award of contract.

				Elliott Construction, LLC		Brazos Paving		Texcon General Contractors	
B. DEMOLITION ITEMS									
5	1	LS	Remove & dispose of existing storm sewer inlet/junction boxes including related items & appurtenances, complete in place	$1,100.00	$1,100.00	$950.00	$950.00	$2,500.00	$2,500.00
6	1	LS	Remove & dispose of existing store sewer pipe including related items & appurtenances, complete in place	$4,500.00	$4,500.00	$16,174.00	$16,174.00	$22,000.00	$22,000.00
7	1	LS	Remove & dispose of existing roadway/driveway/sidewalk pavement including curbs & gutters including related items & appurtenances, complete in place	$16,500.00	$16,500.00	$10,050.00	$10,050.00	$37,000.00	$37,000.00
8	1	LS	Remove & dispose of existing trees/shrubs including related items & appurtenances, complete in place	$1,000.00	$1,000.00	$8,400.00	$8,400.00	$13,000.00	$13,000.00
9	1	LS	Remove & relocate existing signs including related items & appurtenances, complete in place	$500.00	$500.00	$350.00	$350.00	$1,000.00	$1,000.00
10	1	LS	Remove & dispose of existing mailboxes including related items & appurtenances, complete in place	$300.00	$300.00	$1,250.00	$1,250.00	$1,000.00	$1,000.00
11	1	LS	Remove & dispose of existing valves & boxes including related items & appurtenances, complete in place	$800.00	$800.00	$500.00	$500.00	$1,500.00	$1,500.00
TOTAL SECTION B - DEMOLITION				$24,700.00		$37,674.00		$78,000.00	
C. PAVING ITEMS									
12	4.5	STA	R.O.W. preparation including all dirtwork for roadway and riveways including related items & appurtenances, complete in place	$1,100.00	$4,950.00	$2,620.00	$11,790.00	$5,000.00	$22,500.00

City of Bryan - Purchasing Department
Bid Tabulation for #14-068: City Job #332-411-611-425-DE-1401
1st Street Utility Street Rehabilitation
Bid Open Date: September 10, 2014 @ 2:00 p.m.

All bids submitted are reflected on this bid tab sheet. However, the listing of a bid should not be construed as any indication that the City accepts such bid as responsive. The City will notify the successful bidder upon award of contract.

				Elliott Construction, LLC		Brazos Paving		Texcon General Contractors	
13	1835	SY	6" lime stabilized base with minimum of 6% lime by weight compacted to an appaarent dry densite of 98% standard proctor density @ optimum moisture content including related items & appurtenances, complete in place	$6.00	$11,010.00	$4.65	$8,532.75	$10.00	$18,350.00
14	28	Tons	Lime for sub-grade stabilization including related items & appurtenances, complete in place	$205.00	$5,740.00	$180.00	$5,040.00	$250.00	$7,000.00
15	1,711	SY	6" Reinforedconcrete roadwaay & drivewa pavingincluding related items & appurtenances, complete in place	$54.50	$93,249.50	$40.50	$69,295.50	$50.00	$85,550.00
16	815	LF	Monolithic Curb, inclluding related items & appurtenances, complete in place	$5.00	$4,075.00	$4.50	$3,667.50	$12.00	$9,780.00
17	165	SY	4" Reinforced concrete sidewalk including curb including subgrade preparation & compaction to 98/% standard proctor density @ optimum moisture content inclluding related items & appurtenances, complete in place	$50.00	$8,250.00	$38.25	$6,311.25	$50.00	$8,250.00
TOTAL SECTION C - PAVING				$127,274.50		$104,637.00		$151,430.00	
D. DRAINAGE ITEMS									
18	419	LF	36" RCP storm sewer w/full depth cement stabilized sand backfill including related items & appurtenances, complete in place	$128.00	$53,632.00	$128.00	$53,632.00	$150.00	$62,850.00
19	27	LF	30" RCP Storm Sewer w/full depth cement stabilized backfill including related items & appurtenances, complete in place	$114.00	$3,078.00	$110.00	$2,970.00	$140.00	$3,780.00
20	100	EA	24" RCP storm sewer w/full depth cement stabilized backfill including related items & appurtenances, complete in place	$98.00	$9,800.00	$82.00	$8,200.00	$120.00	$12,000.00
21	54	LF	18" RCP storm sewer w/full depth cement stabilized backfill including related items & appurtenances, complete in place	$96.00	$5,184.00	$78.00	$4,212.00	$115.00	$6,210.00

City of Bryan - Purchasing Department
Bid Tabulation for #14-068: City Job #332-411-611-425-DE-1401
1st Street Utility Street Rehabilitation
Bid Open Date: September 10, 2014 @ 2:00 p.m.

All bids submitted are reflected on this bid tab sheet. However, the listing of a bid should not be construed as any indication that the City accepts such bid as responsive. The City will notify the successful bidder upon award of contract.

				Elliott Construction, LLC		Brazos Paving		Texcon General Contractors	
22	6	EA	5' curb inlet including top, ring, lid, grouting of bottom & storm sewer w/related items & appurtenances, complete in place	$3,200.00	$19,200.00	$3,500.00	$21,000.00	$4,000.00	$24,000.00
23	1	EA	15' curb inlet inclluding top, ring, lid, grouting of bottom & storm sewer w/related items & appurtenances, complete in place	$6,470.00	$6,470.00	$6,000.00	$6,000.00	$10,000.00	$10,000.00
24	14	SY	Concrete rep-rap (slope paving), including related items & appurtenances, complete in place	$81.00	$1,134.00	$58.50	$819.00	$290.00	$4,060.00
25	1	EA	5'x5' concrete junction box including top, ring, lid, grouting of bottom & storm sewer w/related items & appurtenances, complete in place	$4,680.00	$4,680.00	$4,250.00	$4,250.00	$3,600.00	$3,600.00
26	2	EA	3'x3' grate inlet box including top, box & grouting of bottom with related items & appurtenances, complete in place	$1,980.00	$3,960.00	4,000.00	$8,000.00	3,200.00	$6,400.00
27	600	LF	TV'ing of storm sewer including related items and appurtenances, complete in plae	$2.00	$1,200.00	$5.78	$3,468.00	$5.00	$3,000.00
TOTAL SECTION D - DRAINAGE				$108,338.00		$112,551.00		$135,900.00	
E. SANITARY SEWER ITEMS									
28	364	LF	6" SDR 26 PVC sanitary sewer line with cement stabilized sand backfill including related items and appurtenances, complete and in place	$79.00	$28,756.00	$53.10	$19,328.40	$94.00	$34,216.00
29	112	LF	18" SDR 26 PVC sewerline with cement stabilized sand backfill, including related fittings, items and appurtenances, complete in place	$135.00	$15,120.00	$64.00	$7,168.00	$140.00	$15,680.00
30	1	EA	4' Standard sanitary sewer manhole including base, sections, cone, rim, lid and related items and appurtenances, complete in place	$3,025.00	$3,025.00	4,000.00	$4,000.00	5,000.00	$5,000.00
31	2	EA	5' Standard sanitary sewer manhole including base, sections, cone, rim, lid & related items & appurtenancews, complete in place	$4,700.00	$9,400.00	$4,800.00	$9,600.00	$7,500.00	$15,000.00

City of Bryan - Purchasing Department
Bid Tabulation for #14-068: City Job #332-411-611-425-DE-1401
1st Street Utility Street Rehabilitation
Bid Open Date: September 10, 2014 @ 2:00 p.m.

All bids submitted are reflected on this bid tab sheet. However, the listing of a bid should not be construed as any indication that the City accepts such bid as responsive. The City will notify the successful bidder upon award of contract.

				Elliott Construction, LLC		Brazos Paving		Texcon General Contractors	
31	4	EA	Long Sewer Service including fittings, cleanout, pipe to row, with related items & appurtenances, complete in place	$1,145.00	$4,580.00	$5,500.00	$22,000.00	$2,500.00	$10,000.00
32	2	EA	Short Sewer Service including fittings, cleanout, pipe to row, with related items & appurtenances, complete in place	$1,115.00	$2,230.00	$4,500.00	$9,000.00	$2,300.00	$4,600.00
33	157	LF	4" sanitary sewer service line installed by licensed plumber, including related fittings, items & appurtenances, complete in place	$20.00	$3,140.00	$44.00	$6,908.00	$75.00	$11,775.00
34	2	EA	Connect proposed 4" service line to existing house plumbing by licensed plumber, including related items & appurtenances, complete in place.	$200.00	$400.00	$500.00	$1,000.00	$1,000.00	$2,000.00
35	14	SY	Concrete Pavement Repair including related items & appurtenances, complete in place	$66.00	$924.00	$108.00	$1,512.00	$100.00	$1,400.00
36	1	EA	6" FUNCO Connection w/concrete collar including related items & appurtenances, complete in place	$150.00	$150.00	$600.00	$600.00	$1,000.00	$1,000.00
37	1	EA	18" FUNCO Connection w/concrete collar repair including related items & appurtenances, complete in place	$500.00	$500.00	$900.00	$900.00	$2,000.00	$2,000.00
38	364	LF	TV'ing of sanitary sewer including related items and appurtenances, complete in place	$2.75	$1,001.00	$4.88	$1,776.32	$5.00	$1,820.00
TOTAL SECTION E -SANITARY SEWER				$69,226.00		$83,792.72		$104,491.00	
F. WATER SYSTEM ITEMS									
39	715	LF	6" C-900 PVC waterline including related fittings, items & appurtenances, complete in place	$27.00	$19,305.00	$44.00	$31,460.00	$68.00	$48,620.00
40	110	LF	6" C-900 PVC waterline installed by boring included related fittings, items & appurtenance, complete in place	$67.00	$7,370.00	$178.00	$19,580.00	$250.00	$27,500.00
41	3	EA	6" Gate valve & box including related items & appurtenances, complete in place	$820.00	$2,460.00	$950.00	$2,850.00	$1,100.00	$3,300.00

City of Bryan - Purchasing Department
Bid Tabulation for #14-068: City Job #332-411-611-425-DE-1401
1st Street Utility Street Rehabilitation
Bid Open Date: September 10, 2014 @ 2:00 p.m.

All bids submitted are reflected on this bid tab sheet. However, the listing of a bid should not be construed as any indication that the City accepts such bid as responsive. The City will notify the successful bidder upon award of contract.

				Elliott Construction, LLC		Brazos Paving		Texcon General Contractors	
42	1	EA	2" Blow off valve including related items & fittings & appurtenances, complete in place	$1,315.00	$1,315.00	$2,500.00	$2,500.00	$1,500.00	$1,500.00
42	1	EA	Concrete pavement repair for waterline, including related items & appurtenances, complete in place	$60.00	$60.00	$72.00	$72.00	$1,000.00	$1,000.00
43	3	EA	Relocate & reconnect existing water meter, including related items & appurtenances, complete in place	$345.00	$1,035.00	$750.00	$2,250.00	$1,000.00	$3,000.00
44	6	EA	Short water service transfer, including related items & appurteanances, complete in place	$700.00	$4,200.00	$3,500.00	$21,000.00	$3,000.00	$18,000.00
45	3	EA	Long water service transfer, including related items & appurtenances, complete in place	$1,315.00	$3,945.00	$4,500.00	$13,500.00	$5,500.00	$16,500.00
46	1	EA	Standard fire hydrant assembly, inclluding related items & appurtenances, complete in place	$3,400.00	$3,400.00	$4,250.00	$4,250.00	$4,500.00	$4,500.00
47	2	EA	Interconnect proposed 6" to existing 2", 6" bling flange, 6" plug & 2" tap inclluding related fittings, items & appurtenances, complete in place	$1,925.00	$3,850.00	$2,500.00	$5,000.00	$3,425.00	$6,850.00
48	20	LF	14" steel casing (3/8" thickness) installed by oepn cut with cement stabilize sand backfill, including related items & appurtenances, complete in place	$165.00	$3,300.00	$140.00	$2,800.00	$250.00	$5,000.00
TOTAL SECTION F - WATER SYSTEM				$50,240.00		$105,262.00		$135,770.00	
TOTAL (SECTIONS A - F)				$414,078.50		$491,856.72		$696,591.00	

Apparent Low Bid

Opened By: Susan Chmelar, Buyer

Recorded By: David Bolton, Engineer

CONTRACT DOCUMENTS AND SPECIFICATIONS

FOR

First Street Utility &
Street Rehabilitation Project

CITY JOB NO. 332-411-425-611-DE-1401

RFB # 14-068

CITY OF BRYAN

The Good Life, Texas Style.™

PREPARED BY:

GOODWIN - LASITER - STRONG

ENGINEERING - ARCHITECTURE - INTERIOR DESIGN - SURVEYING

LUFKIN - GROESBECK - BRYAN/COLLEGE STATION

www.goodwinlasiter.com

JULY 2014

CITY OF BRYAN
The Good Life, Texas Style.

PURCHASING DEPARTMENT

September 4, 2014

ADDENDUM NO. 1

Addendum to City of Bryan Request for Bid No. 14-068
(City Job No. 332-411-425-611-DE-1401)

First Street Utility & Street Rehabilitation

Please be advised of the following change to the Request for Bid package referenced above:

Remove From Drawings: All Construction Standards/Drawings dated 2009
Insert Into Drawings: 2012 Construction Standards/Drawings (Attached and made part of RFP 14-068)

Delete: All mention of the Bid received/due/opening 10:00 am CDT
Insert: 2:00 pm

END OF ADDENDUM

This addendum shall be signed and included with your response package as acknowledgement of the addendum. Failure to acknowledge and submit any addenda may be cause for the bid to be rejected. The City's decision to accept or reject a bid due to a failure to acknowledge and submit addenda shall be final.

Susan Chmelar

Vendor Acknowledgement Signature

Susan Chmelar, Buyer
City of Bryan – Purchasing

1309 E. Martin Luther King St. • Bryan, TX 77803
(979) 209-5500 • Fax: (979) 209-5507
http://www.bryantx.gov/departments/?name=purchasing

Information from Pre-Bid Meeting September 2, 2014 @ 10:00 am. and Question/Answers from the Online Bid System.

1. Due to the development that will be going on in the area, is there a time frame that the awarded contractor would be required to meet?
   Answer: No, that should not be an issue.

2. Have the tie-ins for sanitary sewer lines been verified?
   Answer: Yes, they have been verified by the City of Bryan.

3. We noticed that Page 7 of the specs state bid time is 10:00am, but Page 9 states 2:00pm. Please inform which time is correct.
   Answer: The Bid Opening time and date on Page 9 is correct.

4. What is the estimated budget?
   Answer: The estimate is $423,822.00

5. What time is the pre-bid meeting on the second?
   Answer: Although the time was not posted on Page 7, it is posted on Page 9 "Schedule of Events". The Pre-Bid meeting will be held at 10:00 a.m. C.D.T.

Purchasing Department
1309 E. Martin Luther King St. • Bryan, TX 77803
(979) 209-5500 • Fax: (979) 209-5507

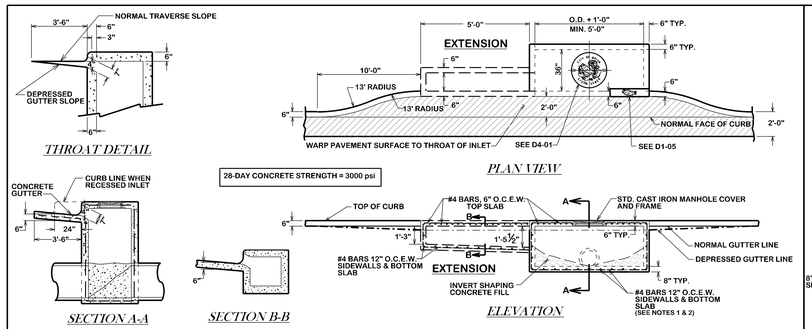

SINGLE RECESSED CURB INLET & CURB INLET W/EXTENSION

D1-00

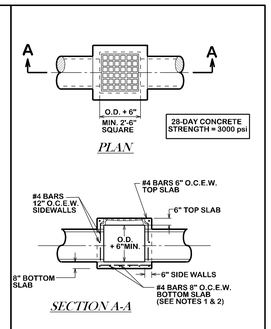

SINGLE GRATE INLET

D1-01

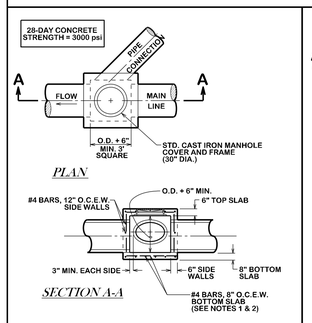

STORM SEWER JUNCTION BOX

D1-02

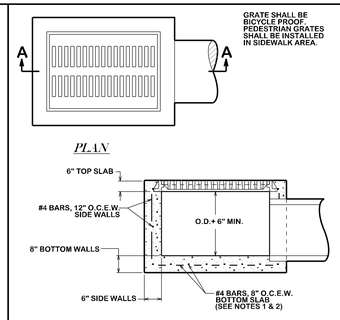

GRATE INLET

D1-03

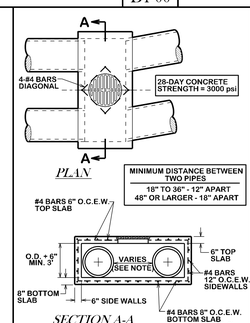

DOUBLE BARREL INLET

D1-04

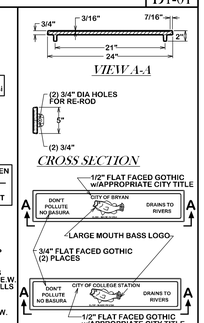

BASS LOGO PLATE

D1-05

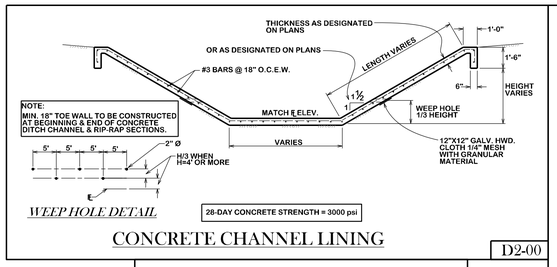

CONCRETE CHANNEL LINING

D2-00

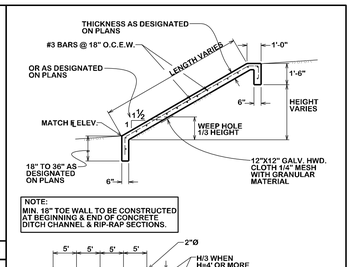

CONCRETE RIP-RAP

D2-01

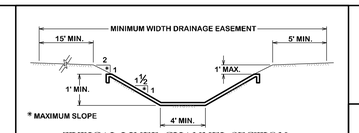

STANDARD CHANNEL SECTION

D2-02

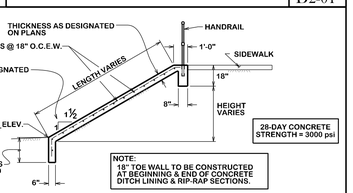

CONCRETE SIDE SLOPE PROTECTION

D2-03

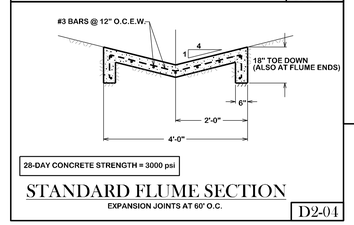

STANDARD FLUME SECTION

EXPANSION JOINTS AT 60' O.C.

D2-04

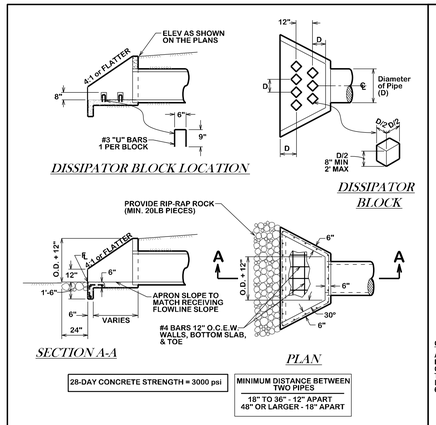

TYPICAL CONCRETE HEADWALL & END WALL WITH WINGS

D3-00

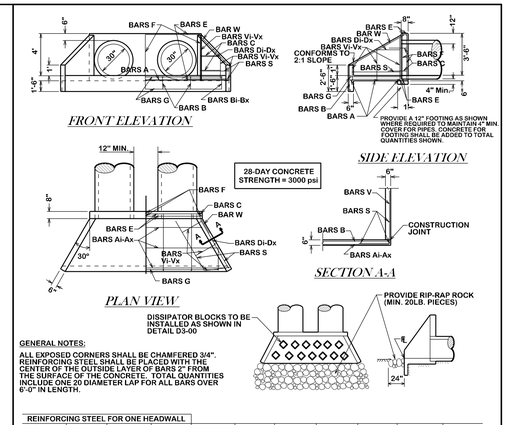

REINFORCING STEEL FOR ONE HEADWALL

BARS Ai-Ax	BARS B	BARS Bi-Bx	BARS C	BARS Di-Dx	BARS E	BARS F	BARS G	BARS S	BARS Vi-Vx	BARS W
#4@12"±	#3@18"±	#3@18"±	#4@12"±	#3@12"±	#5	#4	#3	#4	#4@12"±	#5

CONCRETE HEADWALL FOR 2 PIPES

D3-01

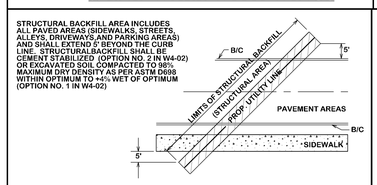

STRUCTURAL BACKFILL AREA

D3-02

STRUCTURAL BACKFILL AREA INCLUDES ALL PAVED AREAS (SIDEWALKS, STREETS, ALLEYS, DRIVEWAYS AND PARKING AREAS) AND SHALL EXTEND 5' BEYOND THE CURB LINE. STRUCTURALBACKFILL SHALL BE CEMENT STABILIZED (OPTION NO. 2 IN W4-02) OR EXCAVATED SOIL COMPACTED TO 98% MAXIMUM DRY DENSITY AS PER ASTM D698 WITHIN OPTIMUM TO +4% WET OF OPTIMUM (OPTION NO. 1 IN W4-02)

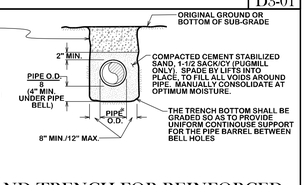

BEDDING AND TRENCH FOR REINFORCED CONCRETE PIPE AND BOX CULVERTS

D3-03

GENERAL NOTES:

1. BASE THICKNESS AND FOUNDATION SHALL BE AS FOLLOWS:

INLET DEPTH (FT.) (MEASURED FROM FLOWLINE TO FINAL GRADE)	BASE THICKNESS
0 - 12	8"
12 AND OVER	12"

2. DEPTHS GREATER THAN 12' WILL REQUIRE 2 MATS OF REINFORCING STEEL IN THE BASE.
3. ALL AREAS WHERE EXISTING VEGETATION AND GRASS COVER HAVE BEEN BARED BY CONSTRUCTION SHALL BE ADEQUATELY BLOCK SODDED OR HYDROMULCHED AND WATERED UNTIL GROWTH IS ESTABLISHED. IN DEVELOPED AREAS WHERE GRASS IS PRESENT, BLOCK SOD WILL BE REQUIRED.
4. APPROVED EROSION CONTROL MEASURES MUST BE INSTALLED DURING THE ENTIRE TIME THAT EARTH HAS BEEN BARED BY CONSTRUCTION AND SHALL STAY IN PLACE UNTIL ACCEPTABLE VEGETATIVE GROWTH IS ESTABLISHED AFTER CONSTRUCTION IS COMPLETE AND THEN REMOVED BY CONTRACTOR.

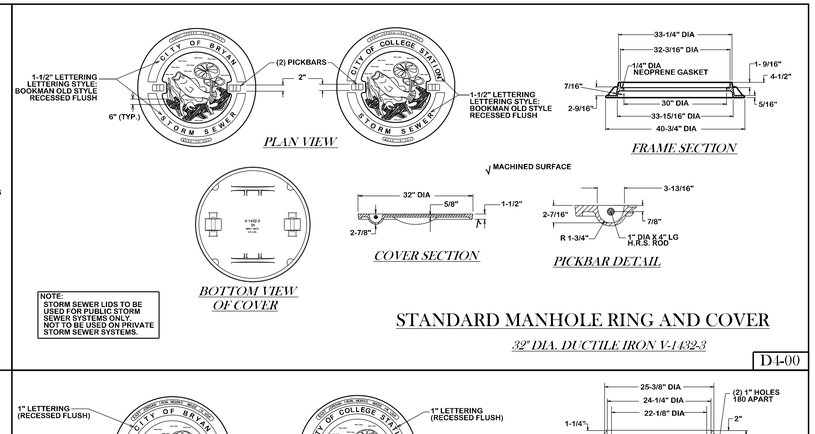

STANDARD MANHOLE RING AND COVER

32" DIA. DUCTILE IRON V-1432-3

D4-00

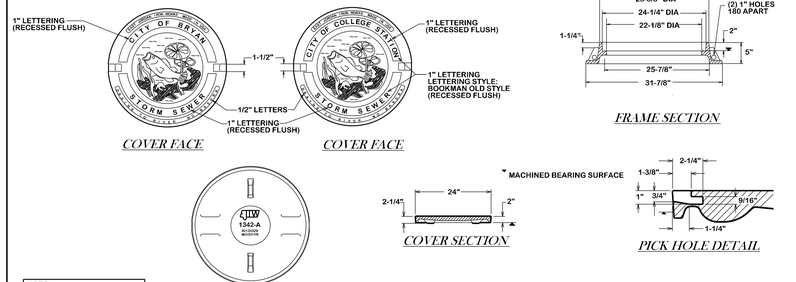

STANDARD MANHOLE RING AND COVER

24" DIA. DUCTILE IRON V-1342-A

D4-01

REVISIONS:

BRYAN - COLLEGE STATION STANDARD DRAINAGE DETAILS

CITY OF COLLEGE STATION

CITY OF BRYAN
The Good Life, Texas Style.

DRAWN BY: C. L. M.
DATE: 08-01-12
SCALE: N T S
APPROVED: W. P. K.

FIGURE:

D

SHEET 1 OF 1

NOTES:

1. A MAX. OF 4 AND A MIN. OF 2 THROAT RINGS SHALL BE USED AT EACH MANHOLE IN NEW OR EXISTING RIGHT-OF-WAY.
2. USE ADEKA SEALANT OR APPROVED EQUAL BETWEEN RING/COVER, ADJUSTMENT RINGS AND CHIMNEY OR CORBEL/CONE SECTION.
3. MANHOLE BASE THICKNESS AND FOUNDATION FROM FLOWLINE TO RIM AS FOLLOWS:

MANHOLE DEPTH (FT.)	BASE THICKNESS
0 - 12	8"
12 AND OVER	12"

4. MANHOLE LOCATION AND COMPACTION AS FOLLOWS:

LOCATION	COMPACTION REQUIREMENT
PAVEMENT	98 % STANDARD PROCTOR - ASTM D 698
LANDSCAPE AREA	90 % STANDARD PROCTOR - ASTM D 698

5. NO RINGS ARE REQUIRED OUTSIDE OF STREET RIGHT-OF-WAY
6. IN FLOODPLAINS OR AREAS OF CONCENTRATED FLOW, THE CONE SHALL EXTEND 1 FOOT ABOVE THE BASE FLOOD ELEVATION OR A BOLT DOWN, WATER-TIGHT RING AND COVER SHALL BE USED, VENTED WHERE REQUIRED.
7. WARNING SIGN ONLY TO BE PLACED WHERE SEWER CROSSES OPEN FIELDS.

MANHOLE DIA.	MAIN SIZE
4 FT	<18in.
5 FT	≥18in. <30in.
6 FT	≥36in.

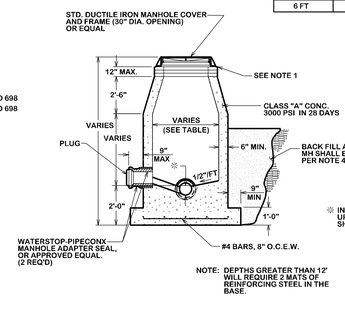

CAST IN PLACE MANHOLE

INVERT = 3/4 DIAMETER OF PIPE UP TO 24". 24" AND LARGER SHALL BE FULL DEPTH INVERTS.

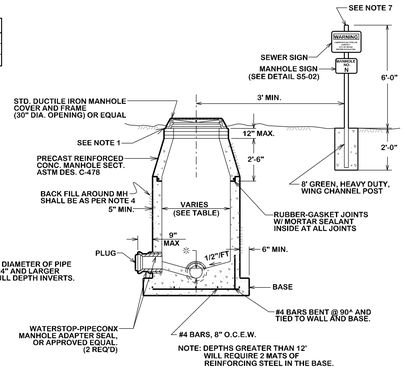

PRE-CAST MANHOLE

STANDARD MANHOLE

S1-00

NOTES:

1. *FOR BEDDING AND TRENCHING WITHIN ALL EXISTING PAVED AREAS, SEE DETAILS FOR OPEN CUT STREETS. (Details ST4-00, ST4-01, ST4-02). THIS NOTE DOES NOT APPLY TO STREETS BEING RECONSTRUCTED.*
2. ALL BEDDING & INSTALLATION OF PVC PIPE SHALL BE IN ACCORDANCE TO ANSI/AWWA STANDARDS FOR PVC PIPE.
3. ALL BEDDING & INSTALLATION OF DUCTILE IRON PIPE SHALL BE IN ACCORDANCE TO ANSI/AWWA C150/A21.50.
4. COMPACTION SHALL BE ATTAINED BY MECHANICAL TAMPING.
5. ALL TRENCHES SHALL BE BACK FILLED AND TEMPORARY PAVING OR PLANKING PLACED AT THE END OF EACH WORKING DAY.

Ⓐ SELECT NATIVE MATERIAL
MATERIAL EXCAVATED FROM THE DITCH, (WHICH IS FREE OF ROCKS, LUMPS, CLODS, OR DEBRIS LARGER THAN TWO (2) INCHES IN THE LARGEST DIMENSION), COMPACTED TO A MINIMUM OF 90% OF MAXIMUM DENSITY AS DETERMINED BY ASTM D698 (STANDARD) AT A MOISTURE CONTENT WITHIN OPTIMUM TO +4% OF OPTIMUM UNDER NON-STRUCTURAL AREAS (ie.. YARDS, PASTURES, EASEMENTS) AND TO A MINIMUM OF 98% OF MAXIMUM DENSITY AS DETERMINED BY ASTM D698 (STANDARD) AT A MOISTURE CONTENT WITHIN OPTIMUM TO +4% OF OPTIMUM UNDER NEW STREET AREAS AND STREETS TO BE RECONSTRUCTED.

Ⓑ GRANULAR MATERIAL
MATERIAL SHALL BE BANK RUN RIVER SAND WHICH IS FREE OF DETRIMENTAL QUANTITIES OF CLAY, DEBRIS, OR ORGANIC MATERIAL AND WHICH, WHEN TESTED BY STANDARD LABORATORY METHODS, MEET THE FOLLOWING REQUIREMENTS:

MAXIMUM LIQUID LIMIT	45
MAXIMUM PLASTICITY INDEX	15
MAXIMUM PERCENT PASSING NO. 200 SIEVE	35
MINIMUM PERCENT PASSING 3/4" SIEVE	100

THE MATERIAL SHALL BE FREE FLOWING AND WHEN WET, SHALL NOT ADHERE TO FORM A BALL WHEN PRESSED IN THE HAND.

Ⓒ CEMENT STABILIZED SAND

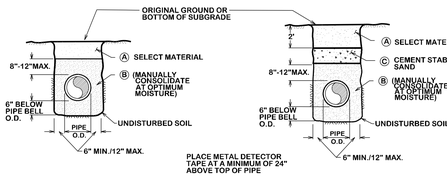

NON-STRUCTURAL AREAS

AREAS TO BE PAVED OR STREETS TO BE RECONSTRUCTED

BEDDING AND TRENCH FOR DI PIPE & PVC PIPE

S1-01

NOTE: MANHOLE BASE SHALL BE PLACED ON FIRM SUBGRADE. ADDITION OF CEMENT STABILIZED SAND OR GRAVEL MAY BE REQUIRED TO STABILIZE FOUNDATION.

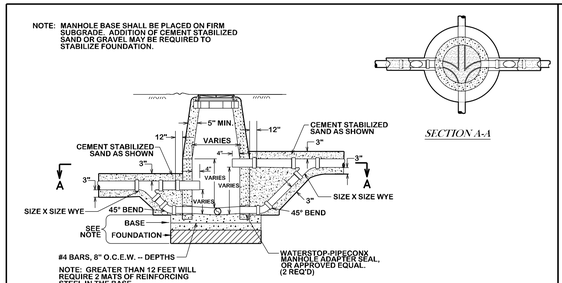

SECTION A-A

CITY OF COLLEGE STATION OUTSIDE DROP MANHOLE

ONLY ALLOWED FOR MAIN LINE CONNECTIONS 60" AND LARGER

S2-00

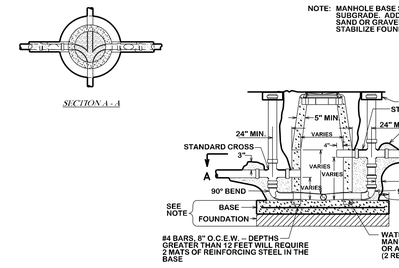

CITY OF BRAYN OUTSIDE DROP MANHOLE

ONLY WHEN APPROVED BY CITY ENGINEER

S2-01

NOTE:

MANHOLE BASE SHALL BE PLACED ON FIRM SUBGRADE. ADDITION OF CEMENT STABILIZED SAND OR GRAVEL MAY BE REQUIRED TO STABILIZE FOUNDATION.

IN EXISTING MANHOLE, PLACE PVC ELBOW ON BENCH. GROUT NEW BENCH TO SPRINGLINE AND TROWEL SMOOTH. FORM SMOOTH CHANNEL TO INVERT.

ALL NEW CONNECTION AT EXISTING MANHOLES SHALL BE BY CORING ONLY

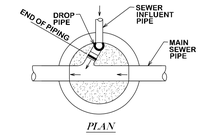

PLAN

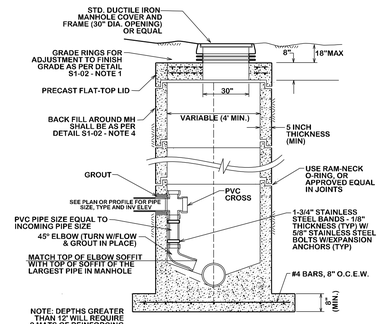

STANDARD DROP MANHOLE

CITY OF BRYAN - DROP MANHOLE TO BE USED ON LINES UP TO 12" IN SIZE

CITY OF COLLEGE STATION - DROP MANHOLE TO BE USED ON LINES UP TO 4' IN SIZE

S2-02

NOTES:

1. FLOW SHALL BE MAINTAINED DURING CONSTRUCTION.
2. THIS DETAIL TO BE USED WHEN A 6" OR LARGER LATERAL NECESSITATES CONSTRUCTION OF A NEW MANHOLE.
3. FOR ADDITIONAL STANDARDS NOT SHOWN, SEE "STANDARD MANHOLE" DETAIL S1-02.
4. CONTRACTOR SHALL BE RESPONSIBLE FOR SUPPORT OF EXISTING SEWER DURING INSTALLATION OF MANHOLE.
5. DOGHOUSE OPENING MAY ONLY BE USED WHEN PLACING A NEW MANHOLE OVER AN EXISTING LINE; OTHERWISE, THE OPENING MUST BE CAST. SIZE, LOCATION, AND ANGLE OF ENTRY SHALL BE AS REQUIRED BY THE PLANS.
6. EXCAVATE TRENCH TO MIN. 13" BELOW BOTTOM OF EXISTING PIPE, COMPACT SUBGRADE. PLACE AND COMPACT 6" OF GRANULAR BEDDING. MONOLITHIC POUR OF MIN. 7" DEPTH, 6-SACK TOPPING MIX TO BE PLACED INSIDE, UNDER, AND OUTSIDE MANHOLE BARREL FROM SURFACE OF BEDDING, AROUND CONCRETE BLOCK RISERS, TO A POINT APPROXIMATELY AT THE SPRING LINE OF THE EXIST. PIPE.
7. DURING THE SAME POUR, THE FINISH MANHOLE SHELF SHALL BE FORMED AND FINISHED AROUND THE BARREL AND EXISTING PIPE AS SHOWN.
8. AFTER CONCRETE SHELF HAS CURED, THE EXISTING PIPE SHALL BE SAW-CUT ON BOTH SIDES TO THE FINISHED SHELF GRADE AND REMOVED. THE EXISTING PIPE SHALL FORM THE TROUGH OF THE MANHOLE AS SHOWN. FILE CUT PIPE TO GIVE SMOOTH EDGES.

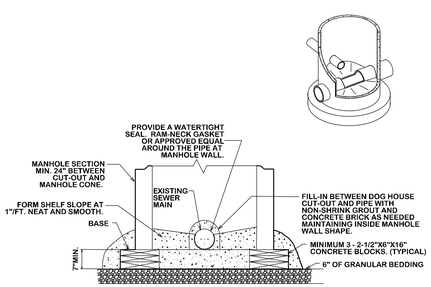

CITY OF COLLEGE STATION GRAVITY SEWER DOGHOUSE MANHOLE

S3-00

NOTES:

1. 1" DIA. "STARTER" HOLES SHALL BE DRILLED THROUGH WALL OF EXISTING MANHOLE SPACED 3" APART CENTER TO CENTER. AFTER "STARTER" HOLES HAVE BEEN INSTALLED AND APPROVED BY A CITY INSPECTOR, THE CONTRACTOR SHALL BEGIN REMOVING THE CONCRETE INSIDE THE PERIPHERAL "STARTER" HOLES. CONCRETE SHALL BE REMOVED WITH PNEUMATIC HAND TOOLS.
2. THE NUMBER OF REBAR DOWELS SHALL VARY WITH SIZE OF OPENING. REBAR SHALL NOT BE SPACED MORE THAN 12" CC.
3. WATERSTOP SHALL BE INSTALLED IN STRICT ACCORDANCE WITH MANUFACTURERS REQUIREMENTS.
4. CONCRETE SHALL BE 3,000 P.S.I.

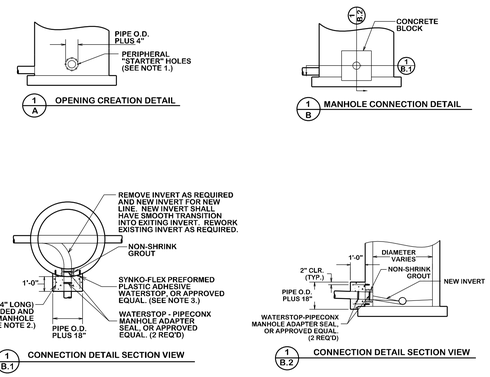

STANDARD MANHOLE TIE-IN

S3-01

NOTES:

1. EACH PIER SHALL BE COMPLETED IN A SINGLE CONTINUOUS POUR.
2. CHAMFER EDGES 3/4".
3. CONTRACTOR SHALL CONSTRUCT CONCRETE PIER TO A MINIMUM DEPTH OF 6' OR TO A DEPTH WHERE A GOOD BEARING SOIL IS ENCOUNTERED.
4. ALL SHAFTS SHALL BE BORED VERTICALLY PLUMB WITHIN 2" TOLERANCE.
5. ALL INFORMATION SHOWN IS CITY MINIMUM. ALL PIERS SHALL BE DESIGNED BY A PROFESSIONAL ENGINEER.

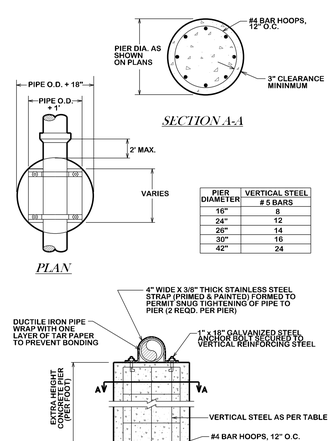

PIER DIAMETER	VERTICAL STEEL # 5 BARS
16"	8
24"	12
26"	14
30"	16
42"	24

TYPICAL CONCRETE DRILLED PIER FOR AERIAL SEWER

S4-00

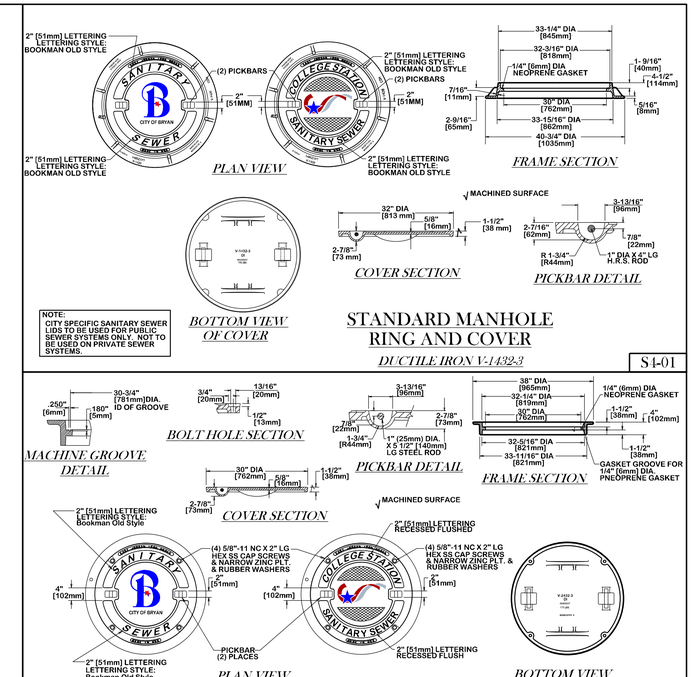

NOTE:
CITY SPECIFIC SANITARY SEWER LIDS TO BE USED FOR PUBLIC SEWER SYSTEMS ONLY. NOT TO BE USED ON PRIVATE SEWER SYSTEMS.

STANDARD MANHOLE RING AND COVER

DUCTILE IRON V-1432-3

S1-01

NOTE:
CITY SPECIFIC SANITARY SEWER LIDS TO BE USED FOR PUBLIC SEWER SYSTEMS ONLY. NOT TO BE USED ON PRIVATE SEWER SYSTEMS.

WATER TIGHT MANHOLE RING AND COVER

DUCTILE IRON V-2432-3

S4-02

REVISIONS:

BRYAN - COLLEGE STATION STANDARD SEWER DETAILS

CITY OF COLLEGE STATION

CITY OF BRYAN
The Good Life, Texas Style.

DRAWN BY: C.L.M.
DATE: 08-01-12
SCALE: N T S
APPROVED: W. P. K.

FIGURE:
S1

SHEET 1 OF 2

GENERAL NOTES:

ALL AREAS WHERE EXISTING VEGETATION AND GRASS COVER HAVE BEEN BARED BY CONSTRUCTION SHALL BE ADEQUATELY BLOCK SODDED OR HYDROMULCHED AND WATERED UNTIL GROWTH IS ESTABLISDHED. IN DEVELOPED AREAS WHERE GRASS IS PRESENT, BLOCK SOD WILL BE REQUIRED. BARED AREAS SHALL BE SEEDED OR SODDED WITHIN 14 CALENDAR DAYS OF LAST DISTURBANCE.

APPROVED EROSION CONTROL MEASURES MUST BE INSTALLED DURING THE ENTIRE TIME THAT EARTH HAS BEEN BARED BY CONSTRUCTION AND SHALL STAY IN PLACE UNTIL ACCEPTABLE VEGETATIVE GROWTH IS ESTABLISHED AFTER CONSTRUCTION IS COMPLETE AND THEN REMOVED BY CONTRACTOR.

ALL EROSION CONTROL MEASURES SHOULD BE CLEANED OF SILT AFTER EVERY RAIN.

ESTABLISHMENT OF VEGETATION MAY BE A WARRANTY ITEM.

STRUCTURAL BACKFILL AREA INCLUDES ALL PAVED AREAS (SIDEWALKS, STREETS, ALLEYS, DRIVEWAYS AND PARKING AREAS) AND SHALL EXTEND 5' BEYOND THE CURB LINE. STRUCTURAL BACKFILL SHALL BE CEMENT STABILIZED (OPTION NO. 2 IN S1-01) OR EXCAVATED SOIL COMPACTED TO 98% MAXIMUM DRY DENSITY AS PER ASTM D698 WITHIN OPTIMUM TO +4% WET OF OPTIMUM (OPTION NO. 1 IN S1-01)

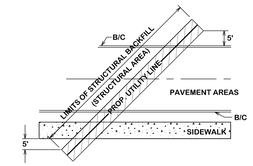

STRUCTURAL BACKFILL AREA

S5-00

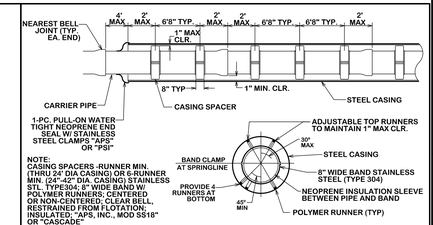

NOTE:
CASING SPACERS -RUNNER MIN. (THRU 24" DIA CASING) OR 6-RUNNER MIN. (24"-42" DIA. CASING) STAINLESS STL. TYPE304; 8" WIDE BAND W/ POLYMER RUNNERS; CENTERED OR NON-CENTERED; CLEAR BELL, RESTRAINED FROM FLOTATION; INSULATED; "APS, INC., MOD SS18" OR "CASCADE"

CASING DETAIL

S5-03

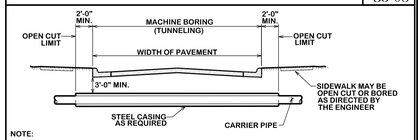

NOTE:

1. FOR MORE INFORMATION ON WATER AND SEWER LINE CROSSING SEE CITY STANDARD SPECIFICATION FOR WATER AND SEWER LINE CONSTRUCTION.
2. STEEL CASING SHALL BE AS SPECIFIED IN THE TECHNICAL SPECIFICATIONS.
3. DRY BORING PREFERRED, WET BORING ALLOWED ONLY WHEN APPROVED BY THE CITY ENGINEER.

TYPICAL URBAN CITY STREET CROSSING

S5-04

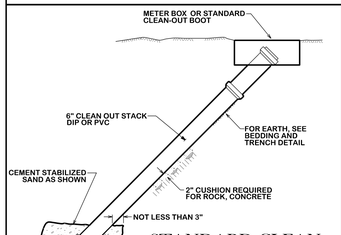

STANDARD CLEAN OUT FOR MAIN LINE

S5-01

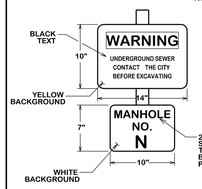

NOTES:

1. FURNISH AS SHOWN ON PLANS AND/OR AT EACH MANHOLE WHERE SEWER LINE CROSSES OPEN FIELDS
2. SIGNS TO BE CONSTRUCTED FROM 20 GA. STEEL BAKED ON ENAMEL FINISH. FURNISH ONE SIGN AND ONE POST FOR EACH OPEN FIELD AND AT OTHER LOCATIONS AS SHOWN ON THE PLANS. FURNISH SAME NUMBER OF REPLACEMENT SIGNS AS FOR EACH INSTALLED (OMITTING MANHOLE NUMBER ON MANHOLE SIGN) (NOT A SEPARATE PAY ITEM)

SEWER WARNING AND MANHOLE IDENTIFICATION SIGN

S5-02

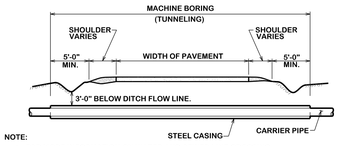

NOTE:

1. FOR MORE INFORMATION ON WATER AND SEWER LINE CROSSING SEE CITY STANDARD SPECIFICATION FOR WATER AND SEWER LINE CONSTRUCTION.
2. STEEL CASING SHALL BE AS SPECIFIED IN THE TECHNICAL SPECIFICATIONS.
3. DRY BORING IS REQUIRED.

TYPICAL RURAL STREET CROSSING

S5-05

NOTE:

1. ALL MATERIAL SHALL BE ASTM D3034 SDR26 W/ GASKETS
2. ALL SERVICE CONNECTIONS & EXTENSIONS ARE TO BE INSTALLED WITH THE MAIN LINE CONSTRUCTION.
3. A CLEAN OUT IS REQUIRED AND WILL BE INSTALLED BY THE CONTRACTOR AT THE ROW FOR EACH SERVICE. CLEANOUT SHALL INCLUDE A BRASS PLUG.
4. CLEANOUTS SHALL BE EXTENDED 4 FEET ABOVE NATURAL GROUND. CLEANOUT CAP FITTING SHALL BE PLACED ON TOP.
5. LOT CORNERS SHALL BE MARKED WITH A LATH UNDER THE SUPERVISION OF A RPLS UPON COMPLETION OF CONSTRUCTION

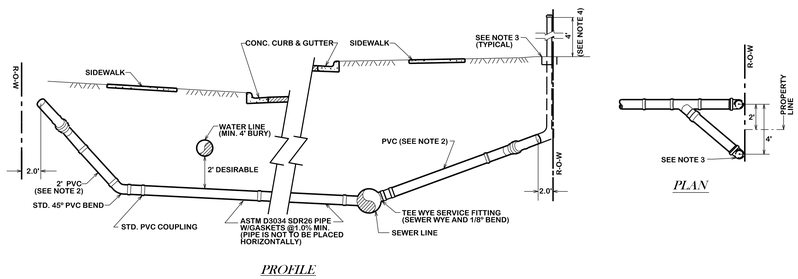

PROFILE

PLAN

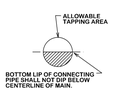

CITY OF BRYAN
SEWER SERVICE LINE CROSSING

S6-00

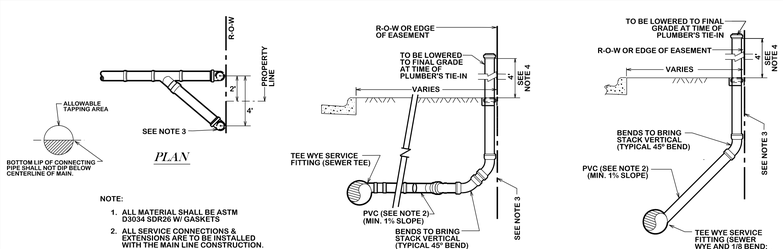

PLAN

STANDARD CONNECTION PROFILE

DEEP CONNECTION PROFILE

NOTE:

1. ALL MATERIAL SHALL BE ASTM D3034 SDR26 W/ GASKETS
2. ALL SERVICE CONNECTIONS & EXTENSIONS ARE TO BE INSTALLED WITH THE MAIN LINE CONSTRUCTION.
3. A CLEAN OUT IS REQUIRED AND WILL BE INSTALLED BY THE CONTRACTOR AT THE ROW FOR EACH SERVICE. CLEANOUT SHALL INCLUDE A BRASS PLUG.
4. CLEANOUTS SHALL BE EXTENDED 4 FEET ABOVE NATURAL GROUND. CLEANOUT CAP FITTING SHALL BE PLACED ON TOP.

CITY OF BRYAN
SANITARY SEWER SERVICE CONNECTION

S6-01

NOTE:

1. WHERE DOUBLE WYE SERVICE ELEVATION IS LESS THAN 2'-7" BELOW PROPOSED BACK OFCURB, MIN. SLAB ELEV. MUST BE SET TO ALLOW SANITARY SEWER SERVICE.
2. MARK EACH SERVICE END WITH METAL "T" POST PAINTED GREEN.
3. ALL MATERIAL SHALL BE ASTM D3034 SDR26 W/ GASKETS
4. ALL SERVICE CONNECTIONS & EXTENSIONS ARE TO BE INSTALLED WITH THE MAIN LINE CONSTRUCTION.
5. A CLEAN OUT IS REQUIRED AND WILL BE INSTALLED BY THE PLUMBER AT THE ROW FOR EACH SERVICE.
6. LOT CORNERS SHALL BE MARKED WITH A LATH UNDER THE SUPERVISION OF A RPLS UPON COMPLETION OF CONSTRUCTION
7. WHEN SERVICE CONNECTION IS DEEP, CONTRACTOR MUST PLACE A VERTICAL STACK THAT SHALL BE BROUGHT WITHIN 3-1/2 FEET BELOW NATURAL GROUND.

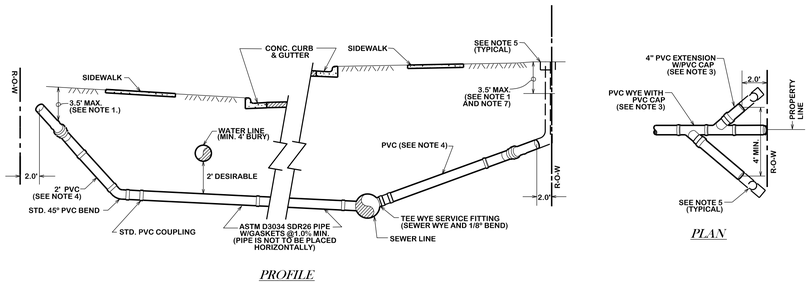

PLAN

CITY OF COLLEGE STATION
SEWER SERVICE LINE CROSSING

S7-00

NOTE:

1. WHERE DOUBLE WYE SERVICE ELEVATION IS LESS THAN 2'-7" BELOW PROPOSED BACK OFCURB, MIN. SLAB ELEV. MUST BE SET TO ALLOW SANITARY SEWER SERVICE.
2. MARK EACH SERVICE END WITH METAL "T" POST PAINTED GREEN.
3. ALL MATERIAL SHALL BE ASTM D3034 SDR26 W/ GASKETS
4. ALL SERVICE CONNECTIONS & EXTENSIONS ARE TO BE INSTALLED WITH THE MAIN LINE CONSTRUCTION.
5. A CLEAN OUT IS REQUIRED AND WILL BE INSTALLED BY THE PLUMBER AT THE ROW FOR EACH SERVICE.
6. WHEN SERVICE CONNECTION IS DEEP, CONTRACTOR MUST PLACE A VERTICAL STACK THAT SHALL BE BROUGHT WITHIN 3-1/2 FEET BELOW NATURAL GROUND.

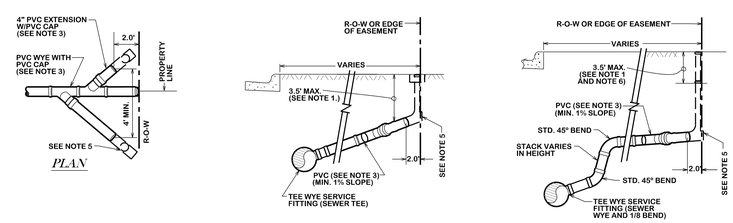

PLAN

STANDARD CONNECTION PROFILE

DEEP CONNECTION PROFILE

CITY OF COLLEGE STATION
SANITARY SEWER SERVICE CONNECTION

S7-01

REVISIONS:
S6-00 & S6-01 revised 10/26/2012.

BRYAN - COLLEGE STATION STANDARD SEWER DETAILS

CITY OF COLLEGE STATION

CITY OF BRYAN
The Good Life, Texas Style.

DRAWN BY: C.L.M.
DATE: 08-01-12
SCALE: N T S
APPROVED: W. P. K.

FIGURE:
S2

SHEET 2 OF 2

NOTE:
TYPE "G" EXPANSION JOINTS IN CURB & GUTTER SHALL BE SPACED AT A MAXIMUM DISTANCE OF 40' APART AND AT ALL RADIUS POINTS, P.T.'S AND P.C.'S. TYPE "B" CONTRACTION JOINTS IN CURB & GUTTER SHALL BE SPACED AT A MAXIMUM DISTANCE OF 10' APART.

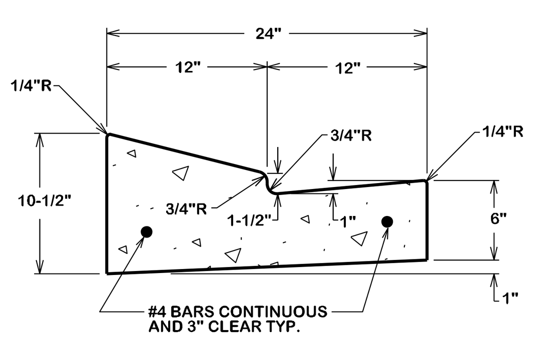

24" LAY DOWN GUTTER SECTION

ST1-00

NOTE:
TYPE "G" EXPANSION JOINTS IN CURB & GUTTER SHALL BE SPACED AT A MAXIMUM DISTANCE OF 40' APART AND AT ALL RADIUS POINTS, P.T.'S AND P.C.'S. TYPE "B" CONTRACTION JOINTS IN CURB & GUTTER SHALL BE SPACED AT A MAXIMUM DISTANCE OF 10' APART.

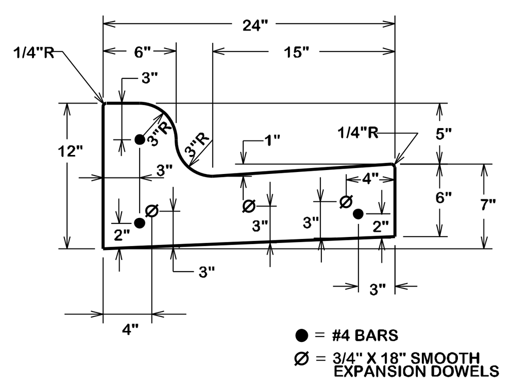

TYPICAL COMBINED CURB & GUTTER SECTION

ST1-01

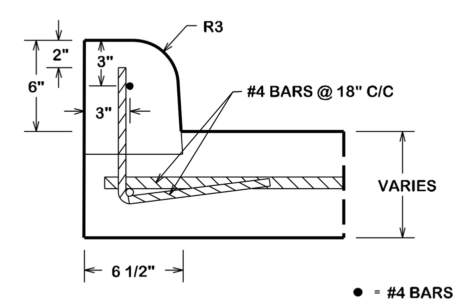

DOWELLED IN CURBS DETAIL

ST1-02

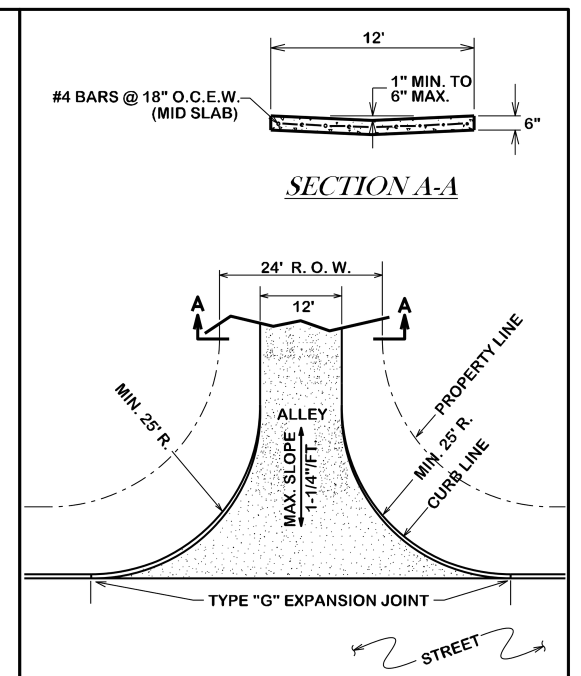

ALLEY PAVING

ST1-06

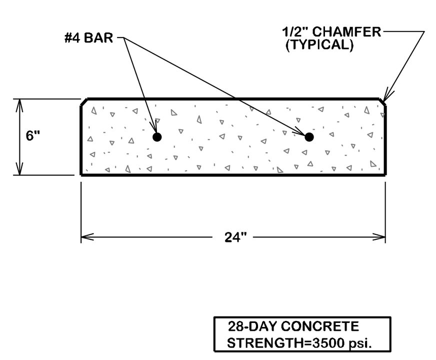

TYPICAL RIBBON CURB

ST1-03

NOTE:
TYPE "G" EXPANSION JOINTS IN CURB & GUTTER SHALL BE SPACED AT A MAXIMUM DISTANCE OF 40' APART AND AT ALL RADIUS POINTS, P.T.'s, AND P.C.'s. TYPE "B" CONTRACTION JOINTS IN CURB & GUTTER SHALL BE SPACED AT A MAXIMUM DISTANCE OF 10' APART

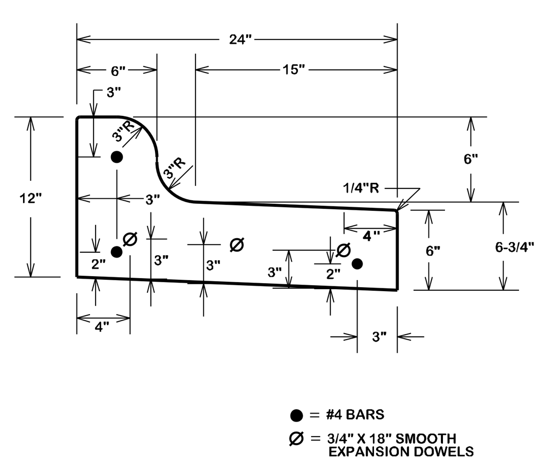

TYPICAL COMBINED SPILL CURB

ST1-04

NOTE:
1. TYPE "G" EXPANSION JOINTS IN CURB & GUTTER SHALL BE SPACED AT A MAXIMUM DISTANCE OF 40' APART AND AT ALL RADIUS POINTS, P.T.'s, AND P.C.'s. TYPE "B" CONTRACTION JOINTS IN CURB & GUTTER SHALL BE SPACED AT A MAXIMUM DISTANCE OF 10' APART
2. PIPE EXTENDED 1"-2" FROM BOC TO BE COVERED WITH FABRIC AND TIED IN PLACE

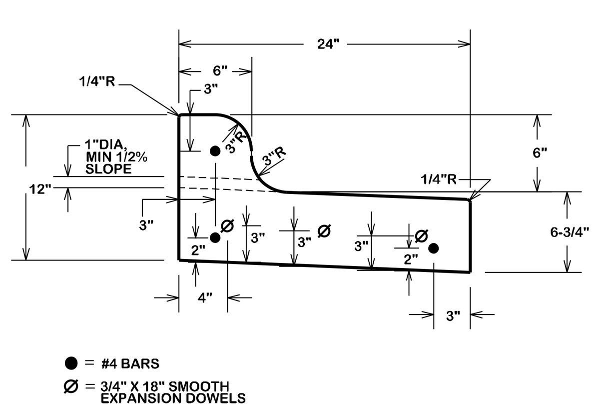

TYPICAL WEEPHOLE CURB

ST1-05

GENERAL NOTES:

ALL AREAS WHERE EXISTING VEGETATION AND GRASS COVER HAVE BEEN BARED BY CONSTRUCTION SHALL BE ADEQUATELY BLOCK SODDED OR HYDROMULCHED AND WATERED UNTIL GROWTH IS ESTABLISHED. IN DEVELOPED AREAS WHERE GRASS IS PRESENT, BLOCK SOD WILL BE REQUIRED. BARED AREAS SHALL BE SEEDED OR SODDED WITHIN 14 CALENDAR DAYS OF LAST DISTURBANCE.

APPROVED EROSION CONTROL MEASURES MUST BE INSTALLED DURING THE ENTIRE TIME THAT EARTH HAS BEEN BARED BY CONSTRUCTION AND SHALL STAY IN PLACE UNTIL ACCEPTABLE VEGETATIVE GROWTH IS ESTABLISHED AFTER CONSTRUCTION IS COMPLETE AND THEN REMOVED BY CONTRACTOR.

ALL EROSION CONTROL MEASURES SHOULD BE CLEANED OF SILT AFTER EVERY RAIN.

ALL TRAFFIC SIGNALS AND APPURTENANCES, AND ALL PAVEMENT MARKINGS AND MARKERS SHALL BE IN ACCORDANCE WITH TXDOT STANDARDS

REFER TO SPEC 31 17 23.23 (PAVEMENT MARKINGS) FOR ADDITIONAL LOCAL REQUIREMENTS.

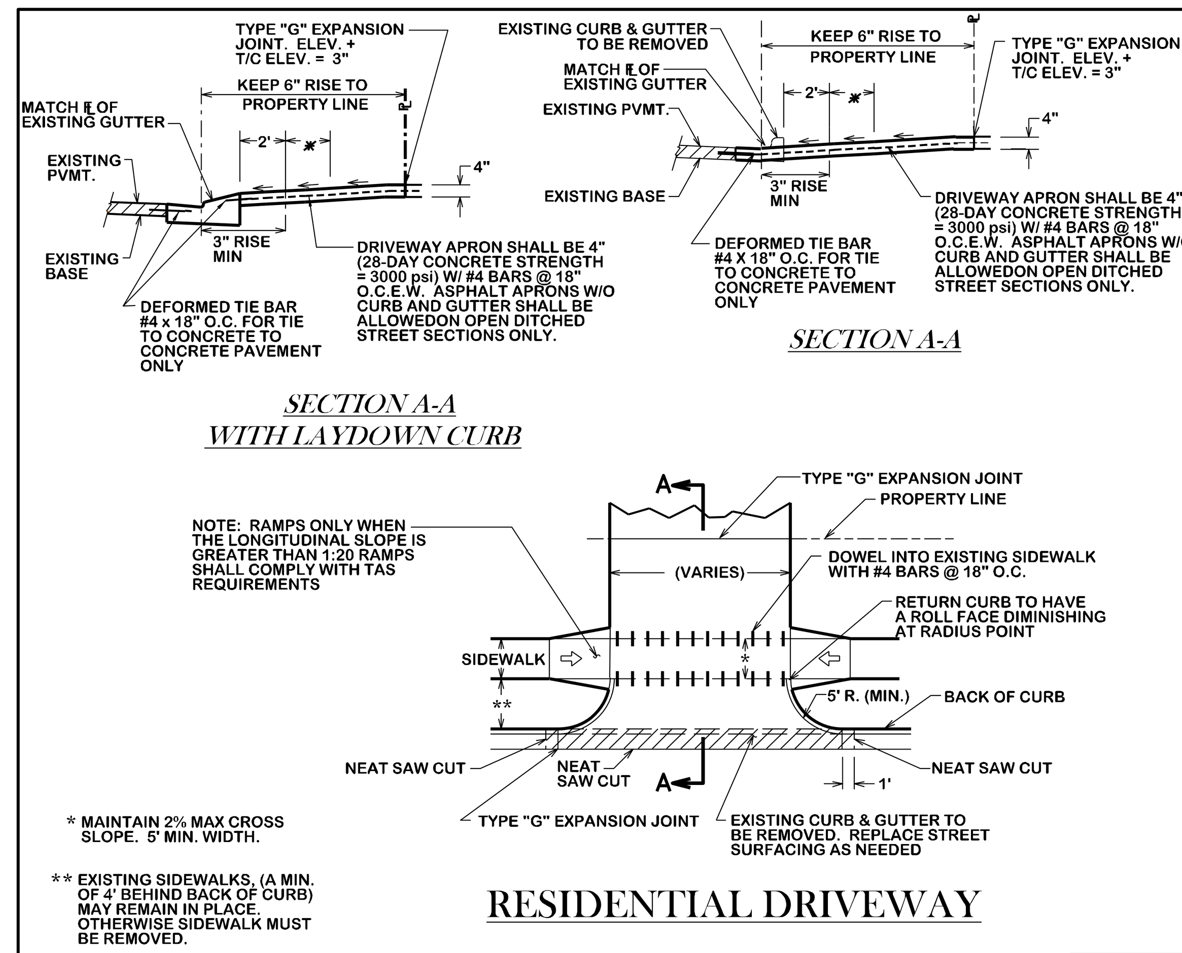

RESIDENTIAL DRIVEWAY

ST2-00

NOTES:
1. IF THERE IS A VALLEY GUTTER, THEN TRANSITION CROWN AT VALLEY GUTTER TO FULL CROWN IN 50'.
2. TYPE "G" EXPANSION JOINTS IN CURB & GUTTER SHALL BE SPACED AT A MAX. DISTANCE OF 40' APART AND AT ALL RADIUS POINTS, P.T.'S & P.C.'S. TYPE "B" CONTRACTION JOINTS IN CURB & GUTTER SHALL BE SPACED AT A MAX. DISTANCE OF 10' APART.
3. 2% MAX SLOPE.
4. 5' MIN TRANSITION TO LAY DOWN CURB BEGIN AT P.T.

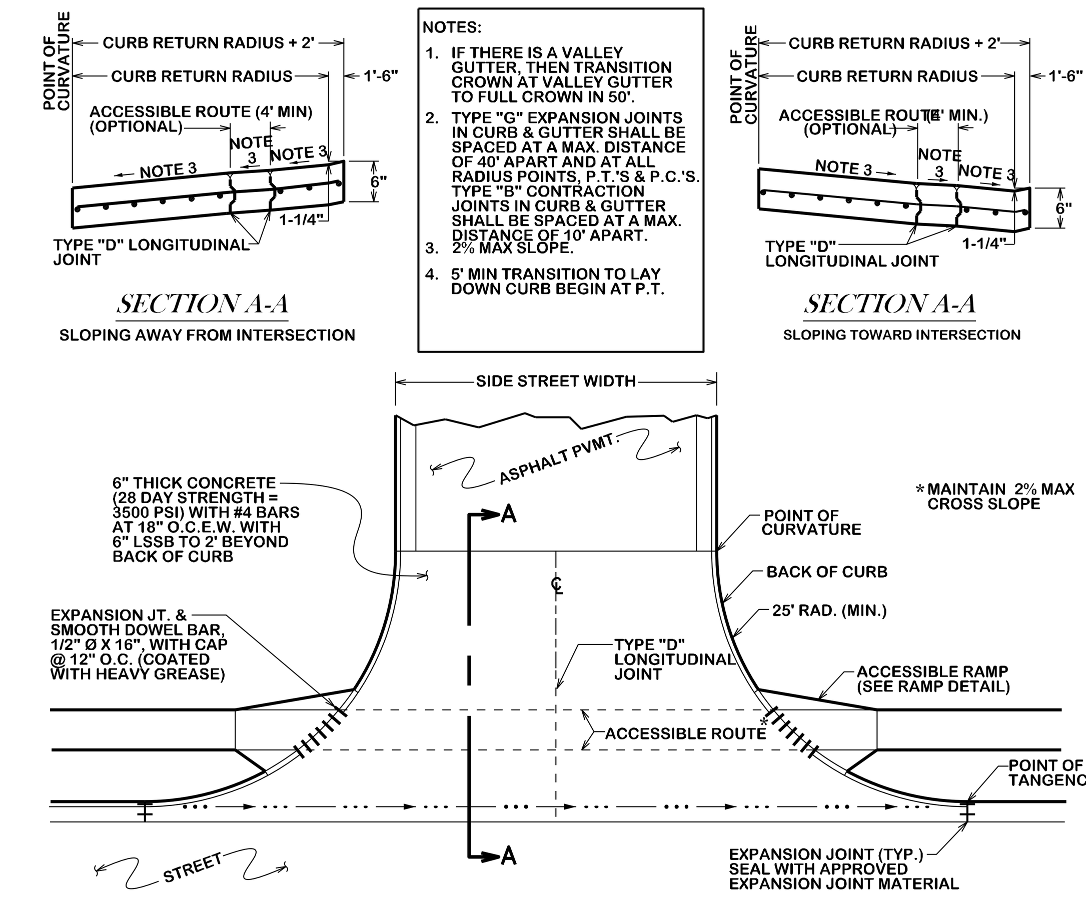

TYPICAL STREET CONCRETE APRON

ST2-01

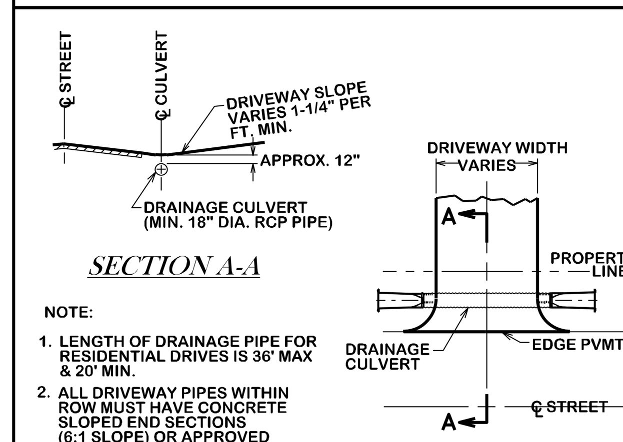

NOTE:
1. LENGTH OF DRAINAGE PIPE FOR RESIDENTIAL DRIVES IS 36' MAX & 20' MIN.
2. ALL DRIVEWAY PIPES WITHIN ROW MUST HAVE CONCRETE SLOPED END SECTIONS (6:1 SLOPE) OR APPROVED EQUAL.

TYPICAL DRIVEWAY ENTRANCE WITH CULVERT

ST2-02

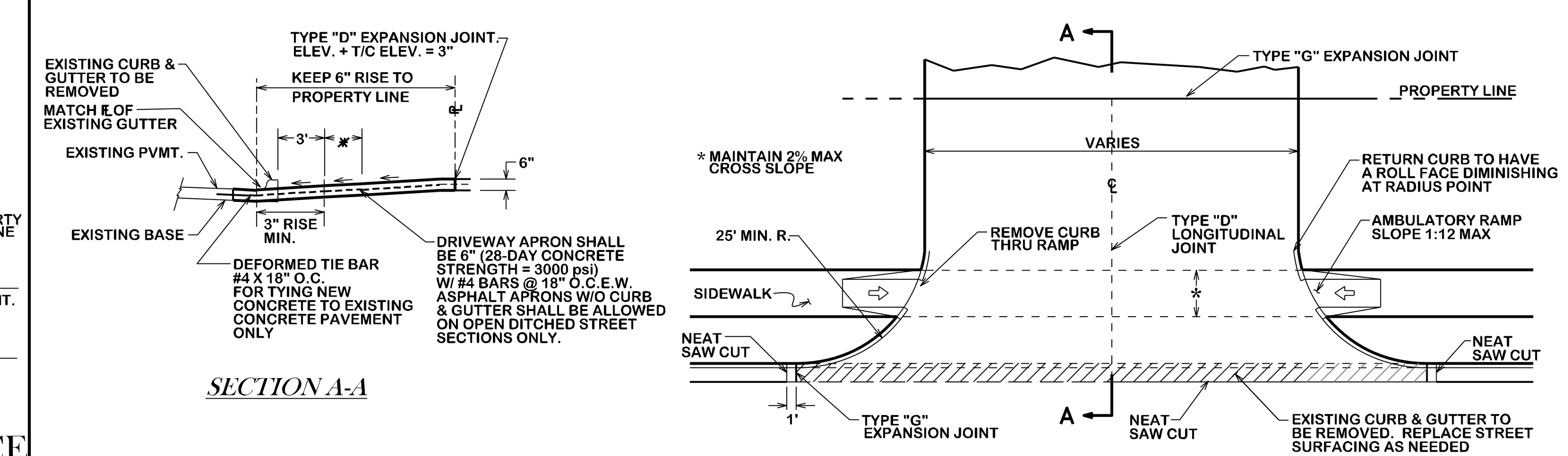

COMMERCIAL DRIVEWAY

ST2-03

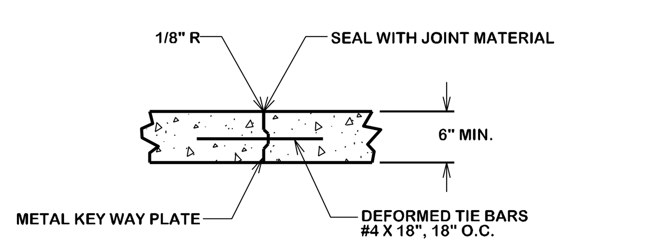

TYPE "D" LONGITUDINAL JOINT

LONGITUDINAL JOINTS SHALL BE REQUIRED ONLY ON THE CENTERLINE OF THE PAVEMENT & IN INTERSECTIONS AS DETAILED

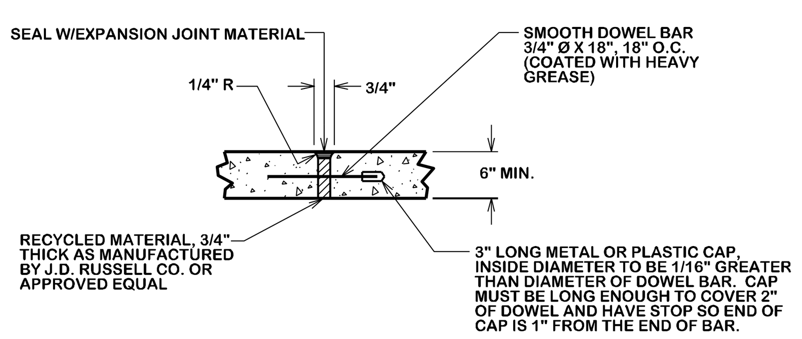

TYPE "G" EXPANSION & CONSTRUCTION JOINT

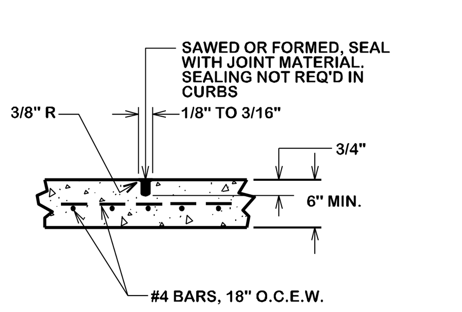

TYPE "B" CONTRACTION JOINT

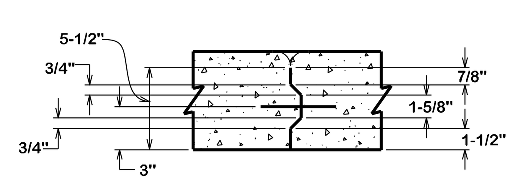

METAL KEY WAY PLATE

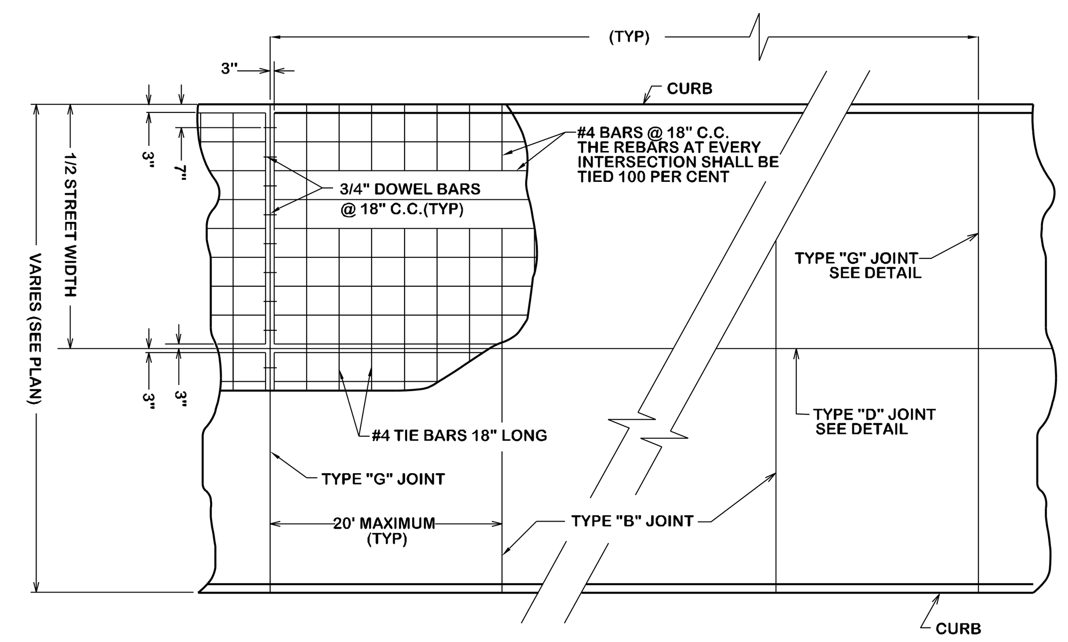

TYPICAL JOINT & REINFORCEMENT LAYOUT FOR CONCRETE PAVEMENT

NOTE:
EXPANSION JOINTS AS SHOWN AND AT EACH RADIUS POINT. CURB EXPANSION JOINTS SHALL BE AT 60' CENTERS. CURB CONTROL JOINTS SHALL BE AT 10' CENTERS.

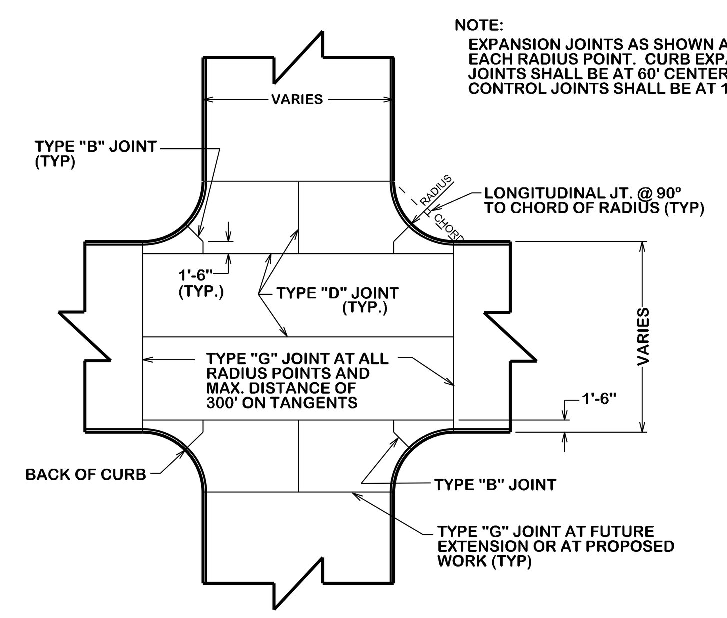

TYPICAL JOINT LAYOUT AT CONCRETE INTERSECTION

ST3-00

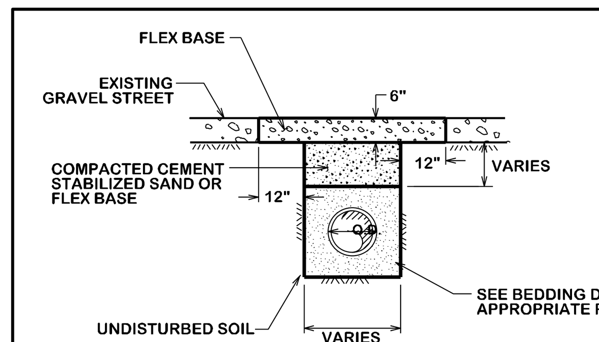

BORING OF STREETS FOR UTILITY PIPE IS THE CITY STANDARD. OPEN CUTTING OF STREETS SHALL BE BY APPROVAL OF THE CITY ENGINEER ONLY.

OPEN CUT GRAVEL STREET

ST4-00

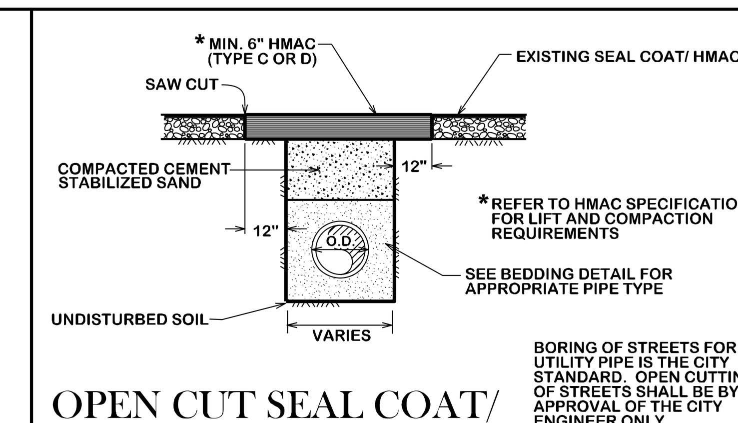

BORING OF STREETS FOR UTILITY PIPE IS THE CITY STANDARD. OPEN CUTTING OF STREETS SHALL BE BY APPROVAL OF THE CITY ENGINEER ONLY.

OPEN CUT SEAL COAT/ OVERLAY STREET

ST4-01

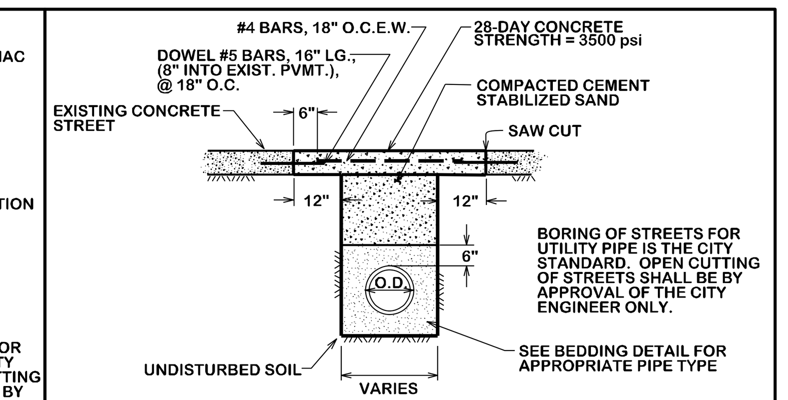

BORING OF STREETS FOR UTILITY PIPE IS THE CITY STANDARD. OPEN CUTTING OF STREETS SHALL BE BY APPROVAL OF THE CITY ENGINEER ONLY.

OPEN CUT CONCRETE STREET

ST4-02

	RESIDENTIAL SECTION	COLLECTOR SECTION
PAVEMENT WIDTH	24	30
R.O.W WIDTH	70	100

NOTES:
1. RURAL SECTIONS WILL NOT REQUIRE 16' EASEMENTS PARALLEL TO ROW WITHIN CITY LIMITS.
2. WITHIN ETJ AREA, RURAL SECTIONS SHALL FOLLOW COUNTY SPECS AND STANDARDS

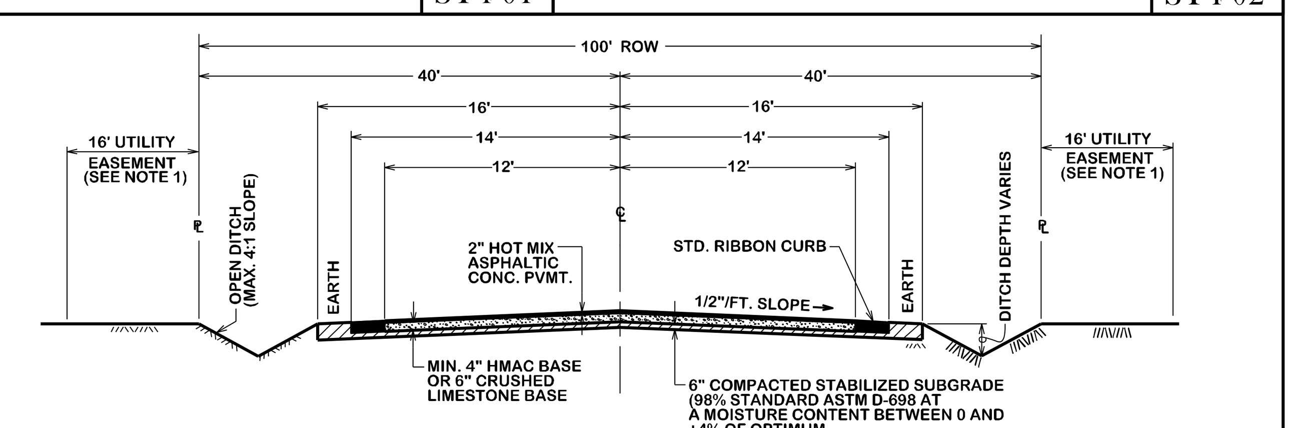

TYPICAL RURAL ROAD RIBBON CURB SECTION

ST4-03

NOTES:
1. ALL SUBGRADES SHALL BE STABILIZED.
2. FOR SUBGRADES WITH PI > 15 AND % PASSING THE #200 SIEVE ≥ 35%, USE LIME STABILIZATION.
3. FOR SUBGRADES WITH PI < 15 AND % PASSING THE #200 SIEVE < 35%, USE PORTLAND CEMENT STABILIZATION.
4. SIDEWALK PLACEMENT VARIES WITH EACH LOCATION AND WILL BE DETERMINED BY THE ENGINEER.
5. REFER TO B/CS UNIFIED DESIGN GUIDELINE MANUAL FOR ACCEPTED RIGHT OF WAY AND PAVEMENT WIDTH.
6. COLLECTOR STREETS WILL BE REQUIRED TO USE 5" HMAC BASE OR 8" CRUSHED LIMESTONE BASE AND STABILIZED SUBGRADE IN ACCORDANCE WITH THE B/CS UNIFIED DESIGN GUIDELINE MANUAL OR AS DIRECTED BY CITY ENGINEER.

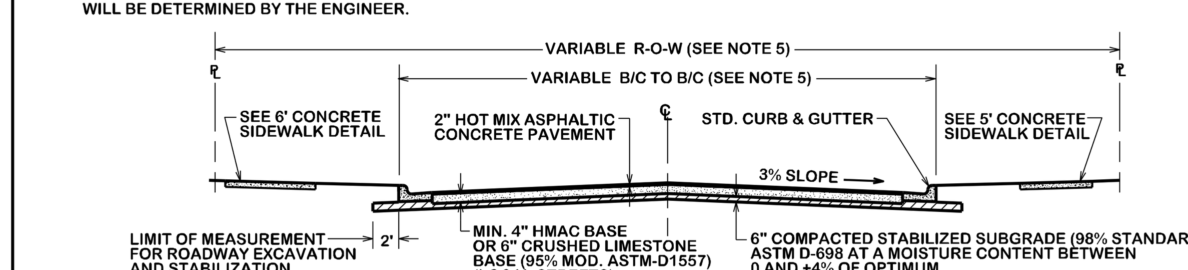

TYPICAL STREET SECTION

ASPHALTIC CONCRETE PAVEMENT

ST4-04

NOTES:
1. REFER TO B/CS UNIFIED DESIGN GUIDELINE MANUAL FOR ACCEPTED RIGHT OF WAY AND PAVEMENT WIDTH.
2. COLLECTOR STREETS WILL BE REQUIRED TO USE 8" REINFORCED CONCRETE (28 DAY STRENGTH = 3500 PSI)

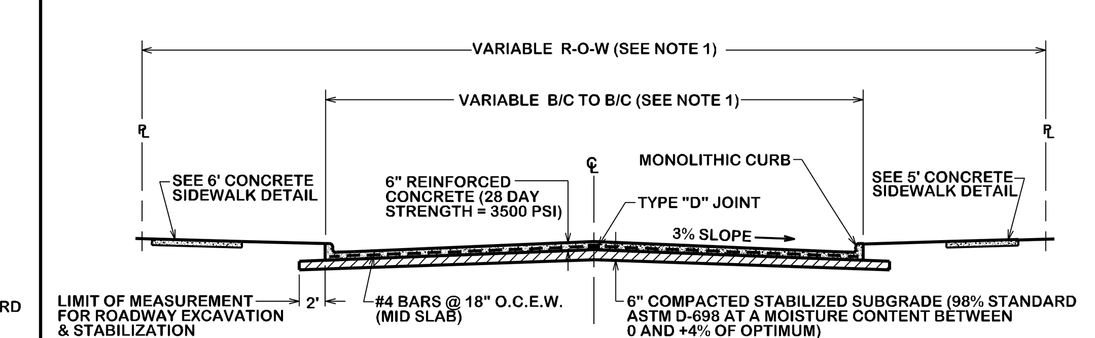

TYPICAL STREET SECTION

REINFORCED CONCRETE PAVEMENT

ST4-05

REVISIONS:

BRYAN - COLLEGE STATION STANDARD STREET DETAILS

CITY OF COLLEGE STATION

CITY OF BRYAN
The Good Life, Texas Style.

DRAWN BY: C.L.M.
DATE: 08-01-12
SCALE: N T S
APPROVED: W.P.K.

FIGURE:
ST

SHEET 1 OF 1

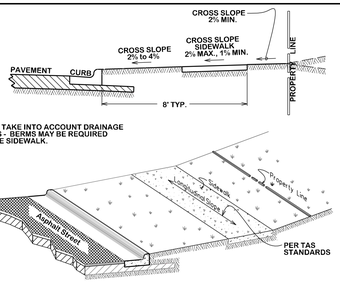

SIDEWALK SLOPE REQUIREMENTS

SW1-00

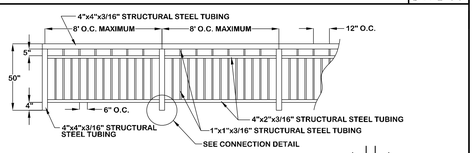

TYPICAL PEDESTRIAN GUARDRAIL

CONNECTION DETAIL

SW1-01

GENERAL NOTES:

ALL AREAS WHERE EXISTING VEGETATION AND GRASS COVER HAVE BEEN BARED BY CONSTRUCTION SHALL BE ADEQUATELY BLOCK SODDED OR HYDROMULCHED AND WATERED UNTIL GROWTH IS ESTABLISHED. IN DEVELOPED AREAS WHERE GRASS IS PRESENT, BLOCK SOD WILL BE REQUIRED. BARED AREAS SHALL BE SEEDED OR SODDED WITHIN 14 DAYS OF LAST DISTURBANCE.

APPROVED EROSION CONTROL MEASURES MUST BE INSTALLED DURING THE ENTIRE TIME THAT EARTH HAS BEEN BARED BY CONSTRUCTION AND SHALL STAY IN PLACE UNTIL ACCEPTABLE VEGETATIVE GROWTH IS ESTABLISHED AFTER CONSTRUCTION IS COMPLETE AND THEN REMOVED BY CONTRACTOR.

ALL EROSION CONTROL MEASURES SHOULD BE CLEANED OF SILT AFTER EVERY RAIN.

ALL TRAFFIC SIGNALS AND APPURTENANCES, AND ALL PAVEMENT MARKINGS AND MARKERS SHALL BE IN ACCORDANCE WITH TXDOT STANDARDS

REFER TO SPEC 31 17 23.23 (PAVEMENT MARKINGS) FOR ADDITIONAL LOCAL REQUIREMENTS.

NOTES:

1. SIDEWALK PLACEMENT SHALL BE IN ACCORDANCE WITH B/CS UNIFIED DESIGN GUIDELINES.
2. FINISH: LIGHT BROOM FINISH. JOINTS TO BE TOOLED 1" DEEP AT AN INTERVAL EQUAL TO THE SIDEWALK WIDTH. EXPANSION JOINTS @ 40' O.C.,CONTRACTION JOINTS @ 4' O.C.
3. DOWEL IN AND TIE TO ANY CONCRETE STRUCTURE ADJACENT TO SIDEWALK (DRIVEWAY, INLET BOX, CURB, JUNCTION BOX, ETC.) WITH #3 x 12" BARS @ 12" O.C. OR #4 x 12" BARS @ 18" O.C.
4. COMPACTION: COMPACTED SUBGRADE MATERIAL COMPACTED TO A DENSITY AT LEAST 98% OF MAXIMUM DRY DENSITY AS DETERMINED BY PROCTOR COMPACTION TEST ASTM D698 (STANDARD) AND SHALL BE 0-4% WET OF THE OPTIMUM MOISTURE CONTENT
5. A MINIMUM CLEAR PEDESTRIAN WIDTH AS DEFINED BY TAS AND ADA SHALL BE PROVIDED FOR ENTIRE LENGTH OF SIDEWALK.

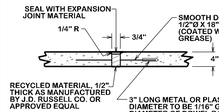

SIDEWALK EXPANSION & CONSTRUCTION JOINT

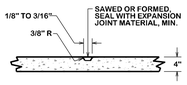

SIDEWALK CONTRACTION JOINT

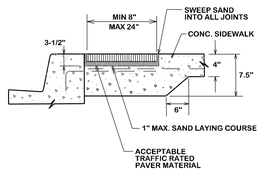

SIDEWALK PAVER SECTION

CONCRETE SIDEWALK

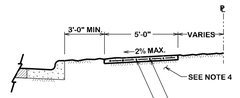

ALONG LOCAL STREETS

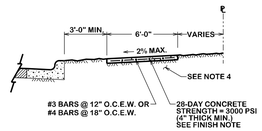

ALONG MINOR COLLECTORS AND LARGER

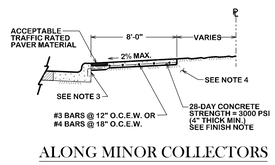

ALONG MINOR COLLECTORS AND LARGER

SW1-02

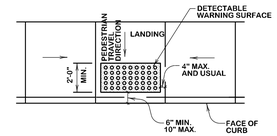

TYPICAL PLACEMENT OF DETECTABLE WARNING SURFACE ON LANDING AT STREET EDGE

SW2-00

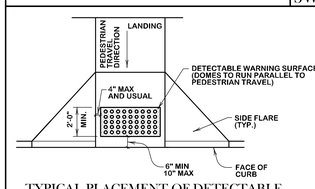

TYPICAL PLACEMENT OF DETECTABLE WARNING SURFACE ON SLOPING RAMP RUN

SW2-01

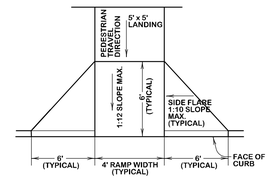

TYPICAL AMBULATORY RAMP W/ FLARED WINGS

SW2-02

CROSSWALKS:

CROSSWALK MARKINGS ARE IMPORTANT TRAFFIC CONTROL DEVICES AT CONTROLLED INTERSECTIONS. THESE DEVICES IDENTIFY THE APPROPRIATE LOCATION FOR PEDESTRIANS TO CROSS THE INTERSECTION AS WELL AS INFORMING DRIVERS WHERE PEDESTRIANS MAYBE PRESENT. NOT ALL LOCATIONS NEED THE CROSSWALKS MARKED, HOWEVER, TYPICALLY COLLECTOR AND ARTERIAL STREETS DO. AS STATED IN THE TMUTCD, AN ENGINEERING STUDY SHOULD BE PERFORMED BEFORE CROSSWALKS ARE INSTALLED AT LOCATIONS OTHER THAN CONTROLLED INTERSECTIONS.

THE CITY OF BRYAN'S PREFERENCE FOR MARKING CROSSWALKS IS THE LONGITUDINAL (OR "LADDER" STYLE). THE CITY OF COLLEGE STATION'S PREFERENCE IS THE TYPICAL "TRANSVERSE" STYLE; HOWEVER, IN THE NORTHGATE AREA, ADJACENT TO SCHOOL OR SCHOOL ZONES, AND OTHER HIGH PEDESTRIAN CROSSINGS, THE LONGITUDINAL (OR "LADDER" STYLE) IS PREFERRED. DEVIATION FROM THESE PREFERENCES WILL BE ALLOWED ONLY WITH THE APPROVAL OF THE CITY ENGINEER.

THE LONGITUDINAL STYLE MARKING SHALL BE 24" WIDE AND 8 FEET IN LENGTH, SPACED 48-INCHES APART. THE TRANSVERSE MARKINGS SHALL CONSIST OF TWO 12-INCH WIDE LINES SEPARATED BY 6 FEET OF UNMARKED PAVEMENT. ALL CROSSWALK PAVEMENT MARKINGS SHALL ALWAYS MEET TXDOT'S SPECIFICATION FOR TYPE I MARKINGS UNLESS OTHERWISE APPROVED BY THE CITY ENGINEER.

ADDITIONAL INFORMATION ABOUT CROSSWALK MARKINGS CAN BE FOUND IN THE TMUTCD.

CROSSWALKS WITH BRICK PAVERS, STAMPED ASPHALT, STAMPED CONCRETE, ETC., SHALL ALSO REQUIRE RETRO-REFLECTIVE, THERMOPLASTIC TRANSVERSE STRIPING.

DETECTABLE WARNINGS GENERAL NOTES:

1. CURB RAMPS MUST CONTAIN A DETECTABLE WARNING SURFACE THAT CONSISTS OF RAISED TRUNCATED DOMES COMPLYING WITH SECTION 4.29 OF THE TEXAS ACCESSIBILITY STANDARDS (TAS). THE SURFACE MUST CONTRAST VISIALLY WITH ADJOINING SURFACES, INCLUDING SIDE FLARES. FURNISH DARK BROWN OR DARK RED DETECTABLE WARNING SURFACE ADJACENT TO UNCOLORED CONCRETE, UNLESS SPECIFIED ELSEWHERE IN THE PLANS.
2. DETECTABLE WARNING SURFACES MUST BE SLIP RESISTANT AND NOT ALLOW WATER TO ACCUMULATE.
3. ALIGN TRUNCATED DOMES IN THE DIRECTION OF PEDESTRIAN TRAVEL WHEN ENTERING THE STREET.
4. SHADED AREAS ON SHEETS 3 AND 4 INDICATE THE APPROXIMATE LOCATION FOR THE DETECTABLE WARNING SURFACE FOR EACH CURB RAMP TYPE.
5. DETECTABLE WARNING SURFACES SHALL BE A MINIMUM OF 24" IN DEPTH IN THE DIRECTION OF PEDESTRIAN TRAVEL, AND EXTEND THE FULL WIDTH OF THE CURB RAMP OR LANDING WHERE THE PEDESTRIAN ACCESS ROUTE ENTERS THE STREET.
6. DETECTABLE WARNING SURFACES SHALL BE LOCATED SO THAT THE EDGE NEAREST THE CURB LINE IS A MINIMUM OF 6" AND A MAXIMUM OF 10" FROM THE EXTENSION OF THE FACE OF CURB. DETECTABLE WARNING SURFACES MAY BE CURVED ALONG THE CORNER RADIUS.
7. ACCEPTABLE PAVER MATERIAL SHALL BE CLAY, VITRIFIED POLYMER COMPOSITE, PRECAST POLYMER CONCRETE, AND CONCRETE.

PEDESTRIAN FACILITIES GENERAL NOTES:

1. ALL SLOPES ARE MAXIMUM ALLOWABLE. THE LEAST POSSIBLE SLOPE THAT WILL STILL DRAIN PROPERLY SHOULD BE USED. ADJUST CURB RAMP LENGTH OR GRADE OF APPROACH SIDEWALKS AS DIRECTED.
2. LANDINGS SHALL BE A 5' X 5' MINIMUM WITH A MAXIMUM 2% SLOPE IN ANY DIRECTION.
3. MANEUVERING SPACE AT THE BOTTOM OF CURB RAMPS SHALL BE A MINIMUM OF 4' X 4' WHOLLY CONTAINED WITHIN THE CROSSWALK AND WHOLLY OUTSIDE THE PARALLEL VEHICULAR TRAVEL PATH.
4. MAXIMUM ALLOWABLE CROSS SLOPE ON SIDEWALK AND CURB RAMP IS 2%.
5. CURB RAMPS WITH RETURNED CURBS MAY BE USED ONLY WHERE PEDESTRIANS WOULD NOT NORMALLY WALK ACROSS THE RAMP, EITHER BECAUSE THE ADJACENT SURFACE IS PLANTING OR OTHER NON-WALKING SURFACE OR BECAUSE THE SIDE APPROACH IS SUBSTANTIALLY OBSTRUCTED. OTHERWISE, PROVIDE FLARED SIDES.
6. ADDITIONAL INFORMATION ON CURB RAMP LOCATION, DESIGN, LIGHT REFLECTIVE VALUE AND TEXTURE MAY BE FOUND IN THE CURRENT EDITION OF THE TEXAS ACCESSIBILITY STANDARDS (TAS) AND 16 TAC 68.102.
7. TO SERVE AS A PEDESTRIAN REFUGE AREA, THE MEDIAN SHOULD BE A MINIMUM OF 5' WIDE. MEDIANS SHOULD BE DESIGNED TO PROVIDE ACCESSIBLE PASSAGE OVER OR THROUGH THEM.
8. CROSSWALK DIMENSIONS, CROSSWALK MARKINGS AND STOP BAR LOCATIONS SHALL BE AS SHOWN ELSEWHERE IN THE PLANS. AT INTERSECTIONS WHERE CROSSWALK MARKINGS ARE NOT REQUIRED, CURB RAMPS SHALL BE ALIGNED WITH THEORETICAL CROSSWALKS, OR AS DIRECTED BY THE ENGINEER.
9. EXISTING FEATURES THAT COMPLY WITH TAS MAY REMAIN IN PLACE UNLESS OTHERWISE SHOWN ON THE PLANS.
10. HANDRAILS ARE NOT REQUIRED ON CURB RAMPS. PROVIDE CURB RAMPS WHEREVER ON ACCESSIBLE ROUTE CROSSES (PENETRATES) A CURB.
11. SEPARATE CURB RAMP AND LANDINGS FROM ADJACENT SIDEWALK AND ANY OTHER ELEMENTS WITH PREMOLD OR BOARD JOINT OF 3/4" UNLESS OTHERWISE DIRECTED BY THE ENGINEER.
12. PROVIDE A SMOOTH TRANSITION WHERE THE CURB RAMPS CONNECT TO THE STREET.
13. FLARE SLOPE SHALL NOT EXCEED 10% MEASURED ALONG CURB LINE.

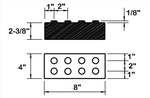

DETECTABLE WARNING PAVER

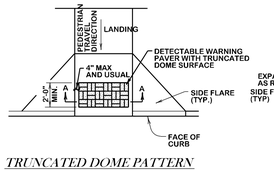

TRUNCATED DOME PATTERN CURB RAMP

GENERAL NOTES (PAVERS)

FURNISH DETECTABLE WARNING PAVER UNITS MEETING ALL REQUIREMENTS OF ASTM C-936, C-33. LAY IN A TWO BY TWO UNIT BASKET WEAVE PATTERN OR AS DIRECTED.

LAY FULL-SIZE UNITS FIRST FOLLOWED BY CLOSURE UNITS CONSISTING OF AT LEAST 25 PERCENT OF A FULL UNIT. CUT DETECTABLE WARNING PAVER UNITS USING A POWER SAW.

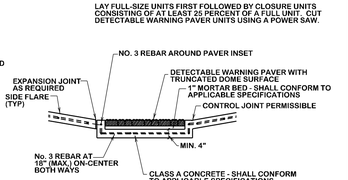

DETECTABLE WARNING PAVER

SECTION A-A

SW2-03

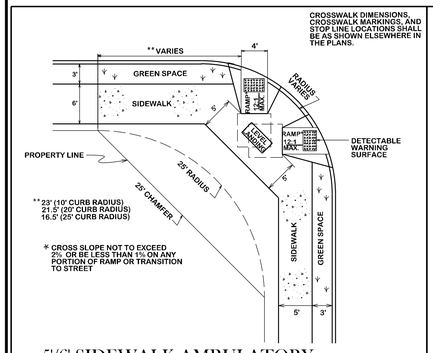

5'/6' SIDEWALK AMBULATORY RAMP AT STREET INTERSECTION

SW3-00

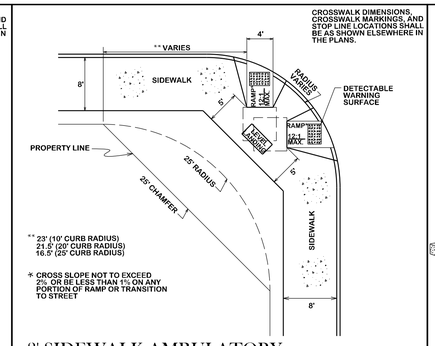

8' SIDEWALK AMBULATORY RAMP AT STREET INTERSECTION

SW3-01

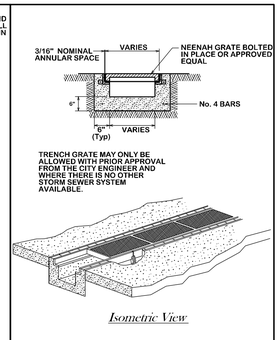

Isometric View

SIDEWALK DRAINAGE TRENCH GRATE

SW3-02

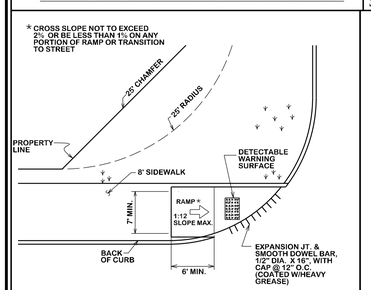

8' SIDEWALK AMBULATORY RAMP AT STREET INTERSECTION & DRIVES

SW3-03

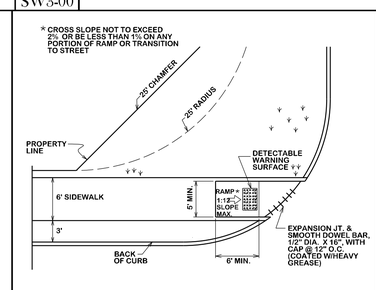

6' SIDEWALK AMBULATORY RAMP AT STREET INTERSECTION & DRIVES

SW3-04

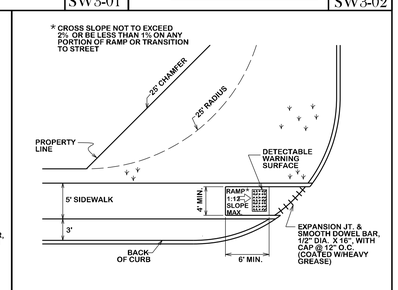

5' SIDEWALK AMBULATORY RAMP AT STREET INTERSECTION & DRIVES

SW3-05

REVISIONS:

BRYAN - COLLEGE STATION STANDARD SIDEWALK DETAILS

CITY OF COLLEGE STATION

CITY OF BRYAN
The Good Life, Texas Style.

DRAWN BY: C.L.M.
DATE: 08-01-12
SCALE: N T S
APPROVED: W. P. K.

FIGURE:
SW

SHEET 1 OF 1

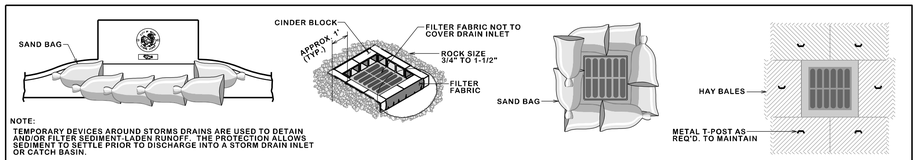

NOTE:

TEMPORARY DEVICES AROUND STORMS DRAINS ARE USED TO DETAIN AND/OR FILTER SEDIMENT-LADEN RUNOFF. THE PROTECTION ALLOWS SEDIMENT TO SETTLE PRIOR TO DISCHARGE INTO A STORM DRAIN INLET OR CATCH BASIN.

SAND BAGS SHALL BE UV RESISTANT AND MUST NOT DEGRADE DUE TO ATMOSPHERIC CONDITIONS.

SAND BAGS SHALL BE REPLACED UPON FIRST SIGN OF DETERIORATION.

STORM DRAIN INLET PROTECTION

SWPP1-00

NOTE:

HAY BALES ARE USED TO DETAIN AND/OR FILTER SEDIMENT-LADEN RUNOFF. THE PROTECTION ALLOWS SEDIMENT TO SETTLE PRIOR TO DISCHARGE INTO A STORM DRAIN INLET OR CATCH BASIN.

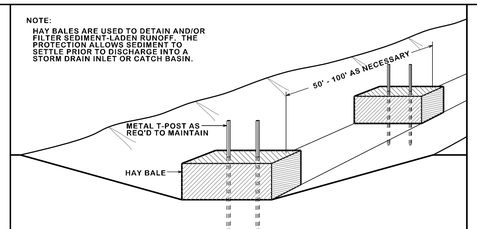

EROSION CONTROL ALONG DITCH

SWPP1-01

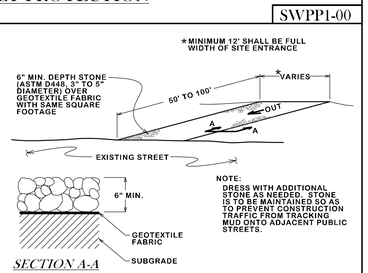

NOTE:

DRESS WITH ADDITIONAL STONE AS NEEDED. STONE IS TO BE MAINTAINED SO AS TO PREVENT CONSTRUCTION TRAFFIC FROM TRACKING MUD ONTO ADJACENT PUBLIC STREETS.

CONSTRUCTION EXIT SILT CONTROL

SWPP1-02

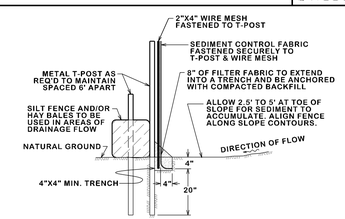

SILT FENCE ASSEMBLY

SWPP1-03

GENERAL NOTES:

ALL AREAS WHERE EXISTING VEGETATION AND GRASS COVER HAVE BEEN BARED BY CONSTRUCTION SHALL BE ADEQUATELY BLOCK SODDED OR HYDROMULCHED AND WATERED UNTIL GROWTH IS ESTABLISHED. IN DEVELOPED AREAS WHERE GRASS IS PRESENT, BLOCK SOD WILL BE REQUIRED. BARED AREAS SHALL BE SEEDED OR SODDED WITHIN 14 CALENDAR DAYS OF LAST DISTURBANCE.

APPROVED EROSION CONTROL MEASURES MUST BE INSTALLED DURING THE ENTIRE TIME THAT EARTH HAS BEEN BARED BY CONSTRUCTION AND SHALL STAY IN PLACE UNTIL ACCEPTABLE VEGETATIVE GROWTH IS ESTABLISHED AFTER CONSTRUCTION IS COMPLETE AND THEN REMOVED BY CONTRACTOR.

ALL EROSION CONTROL MEASURES SHOULD BE CLEANED OF SILT AFTER EVERY RAIN.

REVISIONS:

BRYAN - COLLEGE STATION STANDARD STORM WATER POLLUTION PREVENTION DETAILS

CITY OF COLLEGE STATION

CITY OF BRYAN
The Good Life, Texas Style.

DRAWN BY: C.L.M.
DATE: 08-01-12
SCALE: N T S
APPROVED: W. P. K.

FIGURE:

SWPP

SHEET 1 OF 1

VIEW A - A

NOTE:

1. VALVE EXTENSION TO BE USED ONLY WHEN TOP OF GATE VALVE IS DEEPER THAN 5 FEET FROM FINISHED GRADE.
2. ALL VALVE OPERATING NUT EXTENSIONS ARE TO BE MADE OF STEEL, SIZED AS NOTED, AND PAINTED WITH TWO (2) COATS OF METAL PAINT.
3. EXTENSIONS SHALL BE A MINIMUM OF ONE (1) FOOT LONG.
4. VALVE BOX LIDS LOCATED ON VALVES TO ISOLATE FIRE SUPPRESSION LINES FROM PUBLIC WATER LINES SHALL BE AMPro USA, LL562 LOCKABLE LID.

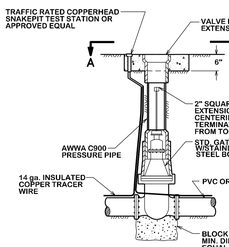

GATE VALVE & BOX

W1-00

GENERAL NOTES:

1. FINELY DIVIDED EARTH FREE OF ROCK, LUMPS AND CLODS EXCEEDING 6" SHALL BE PLACED BY HAND, AND COMPACTED AROUND THE CAST IRON PIPE TO A DEPTH OF 12" OVER THE TOP OF THE PIPE BEFORE BACKFILL IS BEGUN BY ANY MECHANICAL EQUIPMENT.
2. ALL CONCRETE BLOCKING SHALL BE - 28 DAY CONCRETE STRENGTH = 2000psi.
3. ALL THRUST BLOCKING SHALL PROVIDE A MINIMUM OF 2 SQUARE FEET OF BEARING AREA OF CONCRETE ON UNDISTURBED SOIL, OR AS DIRECTED BY THE ENGINEER.
4. WATER MAINS WILL NOT BE FULLY PRESSURIZED UNTIL CONCRETE HAS REACHED 7 DAY STRENGTH.
5. ALL PIPE WILL BE LAID SO AS THE ENTIRE BARRELL WILL HAVE FULL BEARING ON THE FILLED TRENCH BOTTOM. BELL HOLES SHALL BE CUT FOR EACH BELL AND FIRE HYDRANT.
6. ALL FITTING SHALL BE MECHANICL JOINTS UNLESS OTHERWISE DIRECTED.
7. HYDRANTS SHALL BE LOCATED NO CLOSER THAN 3 FEET MEASURED FROM THE BACK OF CURB TO THE FACE OF THE STEAMER ON THE FIRE HYDRANT.
8. IF MAIN VALVE IS WITHIN 50 FEET OF FIRE HYDRANT THEN ASSEMBLY VALVE MAY BE OMITTED ON A DEAD END HYDRANT LEAD WITH NO ADDITIONAL CONNECTIONS.
9. HEIGHT OF FIRE HYDRANT MEASURED FROM THE STEAMER NOZZLE SHALL BE 18 TO 24 INCHES ABOVE NEAREST FINAL GRADE.

VIEW A - A

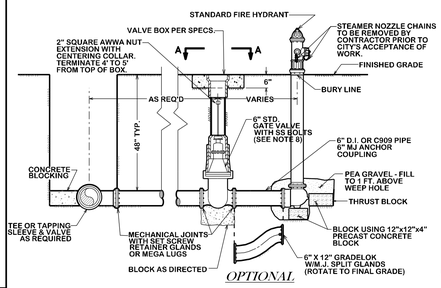

OPTIONAL

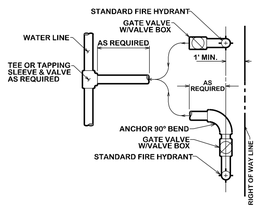

FIRE HYDRANT LOCATION
REALIGN AS NEEDED

STANDARD FIRE
HYDRANT ASSEMBLY

W1-02

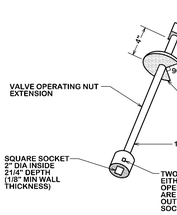

GATE VALVE EXTENSION

W1-01

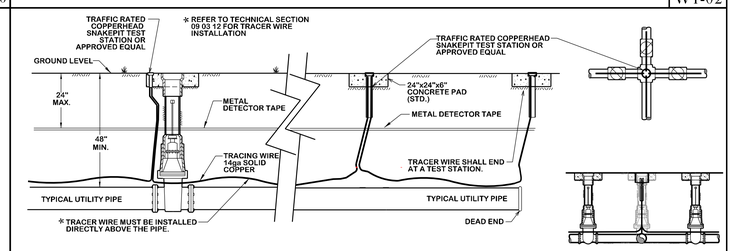

UTILITY PIPE LOCATION MATERIALS

W1-03

THRUST BLOCK NOTES:

1. ALL CALCULATIONS ARE BASED ON INTERNAL PRESSURE OF 200 psi FOR 24" AND SMALLER INNER DIAMETER PIPE.
2. ALL BEARING SURFACES OF THRUST BLOCKS SHALL BE PLACED AGAINST UNDISTURBED EARTH OR ROCK.
3. CONCRETE FOR BLOCKING SHALL BE 2000 psi.
4. DIMENSIONS MAY BE VARIED AS REQUIRED BY FIELD WHERE AND AS DIRECTED BY THE ENGINEER. THE VOLUME OF CONCRETE BLOCKING SHALL NOT BE LESS THAN SHOWN HERE.
5. WATER MAIN SHALL NOT BE PRESSURIZED UNTIL ALL CONCRETE BLOCKING HAS REACHED 1500 psi.

HORIZONTAL THRUST BLOCK SCHEDULE

BEND	SIZE	A (ft)	B (ft)	C (ft)	E (ft)	G (ft)	VOLUME (c.y.)
90°	6,8"	5.0	1.5	1.5	0.9	2.7	0.4
	10,12"	6.5	2.5	1.5	1.2	4.0	1.0
45°	6,8"	2.0	2.0	1.5	0.9	1.5	0.2
	10,12"	3.5	2.5	1.5	1.2	2.2	0.5
22.5°	6,8"	1.5	1.5	1.5	0.9	0.8	0.1
	10,12"	2.0	2.5	1.5	1.2	1.1	0.3
11.25°	6,8"	1.0	1.5	1.5	0.9	0.4	0.1
	10,12"	1.5	1.5	1.5	1.2	0.6	0.1

TEE SCHEDULE

ID (in)	THRUST (tons)	C (ft)	A (ft)	VOLUME (c.y.)
4,6,8	5.1	1.5	2.5	0.3
10,12	11.3	1.5	3.5	0.6

NOTE:

USE POLYETHYLENE WRAP OR EQUAL BETWEEN CONCRETE & PLUG TO PREVENT CONCRETE FROM STICKING TO PLUG.

THRUST BLOCK DETAILS

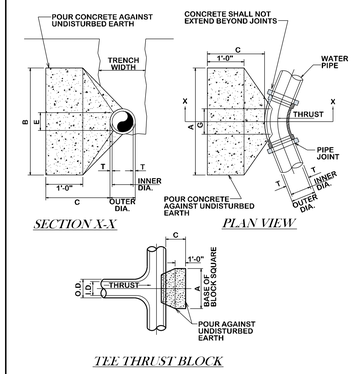

TYPICAL HORIZONTAL
THRUST BLOCK

W2-00

NOTES:

1. NO SPLICES IN COPPER TUBING WILL BE ALLOWED FOR SINGLE SERVICE OR BETWEEN THE SERVICE SADDLE AND THE WYE FOR DOUBLE SERVICE.
2. IT SHALL BE THE RESPONSIBILITY OF THE CONTRACTOR TO PRESSURE TEST LINE IMMEDIATELY AFTER THE STREET CROSSINGS HAVE BEEN INSTALLED.
3. MARK EACH SERVICE END WITH METAL "T" POST PAINTED BLUE.
4. MATERIAL USED SHALL BE AS SPECIFIED OR AN APPROVED EQUAL.
5. ALL CONNECTIONS TO BE COMPRESSION TYPE.
6. ALL SERVICE WYES & EXTENSIONS ARE TO BE INSTALLED WITH THE MAIN LINE CONSTRUCTION.
7. METERS AND VALVE BOXES SHALL BE PLACED BY THE CITY UPON PAYMENT OF FEE.
8. LOT CORNERS SHALL BE MARKED WITH A LATH UNDER THE SUPERVISION F A RPLS UPON COMPLETION OF CONSTRUCTION.

** SEE TECHNICAL SECTION 33 12 13 FOR MATERIAL REQUIREMENTS

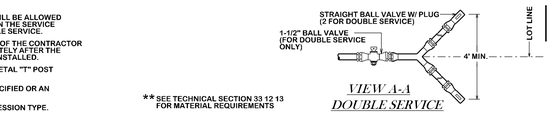

VIEW A-A
DOUBLE SERVICE

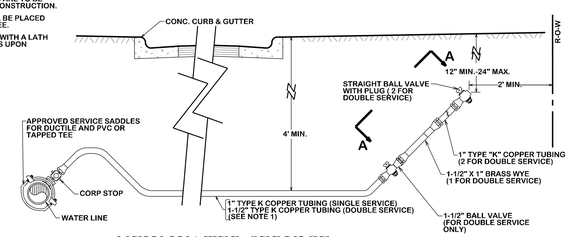

NEW WATER SERVICE

(SHORT AND LONG SIDE)

W2-01

STRUCTURAL BACKFILL AREA INCLUDES ALL PAVED AREAS (SIDEWALKS, STREETS, ALLEYS, DRIVEWAYS,AND PARKING AREAS) AND SHALL EXTEND 5' BEYOND THE CURB LINE. STRUCTURAL BACKFILL SHALL BE CEMENT STABILIZED (SEE DETAIL W4-02 - AREASTO BE PAVED) OR EXCAVATED SOIL COMPACTED TO 98% MAXIMUM DRY DENSITY AS PER ASTM D696 WITHIN OPTIMUM TO +4% WET OF OPTIMUM (SEE DETAIL W4-02 - NON-STRUCTURAL AREAS)

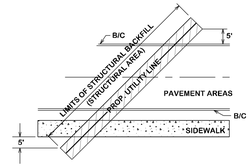

STRUCTURAL BACKFILL AREA

W2-02

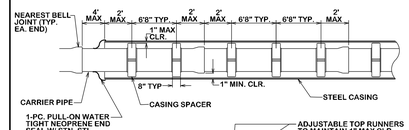

1-PC. PULL-ON WATER TIGHT NEOPRENE END SEAL W/ STN. STL. CLAMPS "APS" OR "PSI"

NOTE: CASING SPACERS 4-RUNNER MIN. (THRU 24" DIA CASING) OR 6-RUNNER MIN. (24"-42" DIA. CASING) STAINLESS STL. TYPE304; 8" WIDE BAND W/ POLYMER RUNNERS; CENTERED OR NON-CENTERED; CLEAR BELL, RESTRAINED FROM FLOTATION; INSULATED; "APS, INC., MOD SS18" OR "CASCADE"

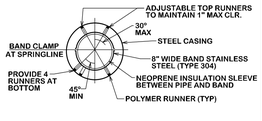

CASING DETAIL

W2-03

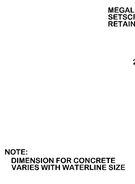

NOTE:
DIMENSION FOR CONCRETE
VARIES WITH WATERLINE SIZE

PLAN VIEW

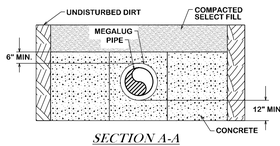

SECTION A-A

END OF LINE BLOCKING

W3-00

NOTES:

1. FURNISH AS SHOWN ON PLANS AND ON ALL VALVE SIGN POSTS.
2. SIGNS TO BE CONSTRUCTED FROM 20 GA. STEEL BAKED ON ENAMEL FINISH. FURNISH ONE WARNING AND ONE VALVE SIGN AND ONE POST FOR EACH VALVE INSTALLED AND AT OTHER LOCATIONS AS SHOWN ON PLANS. FURNISH SAME NUMBER OF REPLACEMENT SIGNS AS FOR EACH INSTALLED (OMITTING VALVE NUMBER ON VALVE SIGN). (NOT A SEPARATE PAY ITEM)

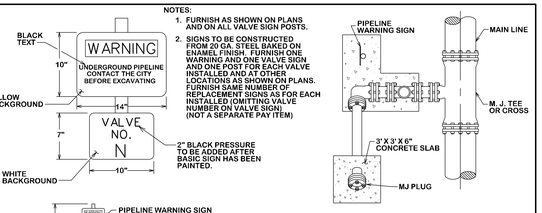

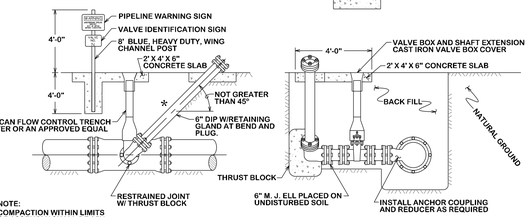

* NOTE:
COMPACTION WITHIN LIMITS
OF ASSEMBLY SHALL BE 95%
STANDARD DENSITY PER
ASTM D698

IN-LINE BLOW OFF ASSEMBLY

W3-01

NOTE:

1. EMBED COPPER LINE IN TAMPED SAND FROM UNDISTURBED SOIL TO 6" ABOVE AND ON BOTH SIDES OF COPPER PIPE.
2. PAYMENT FOR BID ITEM OF "AIR RELEASE VALVE" SHALL INCLUDE ALL MATERIALS, AS SHOWN IN DETAIL, INCLUDING MAIN LINE TAPPING SADDLE.
3. PIPE SIZE SHALL BE 1" OR 2".
4. SIZE OF LINES AND VALVES MAY BE MODIFIED BY THE ENGINEER

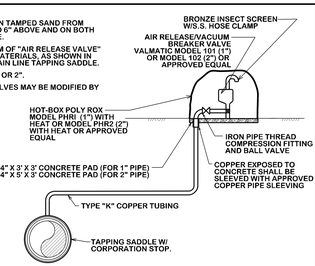

AIR RELEASE VALVE & VACUUM CHECK VALVE

W3-02

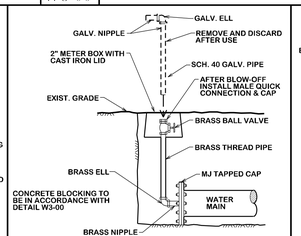

2" BLOW-OFF RISER

W3-03

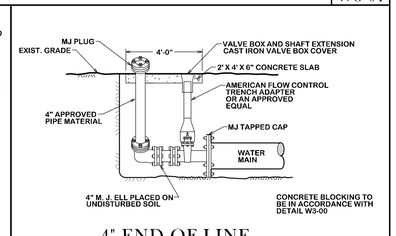

4" END OF LINE
BLOW-OFF

W3-04

NOTE:

1. FOR MORE INFORMATION ON WATER AND SEWER LINE CROSSING SEE CITY STANDARD SPECIFICATION FOR WATER AND SEWER LINE CONSTRUCTION
2. STEEL CASING SHALL BE AS SPECIFIED IN THE TECHNICAL SPECIFICATIONS.
3. DRY BORING PREFERRED, WET BORING ALLOWED ONLY WHEN APPROVED BY THE CITY ENGINEER.
4. PIPE CROSSING A ROADWAY SHALL BE INSTALLED ABOVE THE MAIN IT TIES INTO WITH A BEND SUCH THAT THE CARRIER PIPE CAN BE PULLED ABOVE THE PARALLEL MAIN.

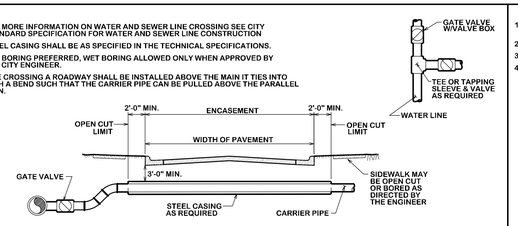

TYPICAL URBAN CITY STREET CROSSING

W4-00

NOTE:

1. FOR MORE INFORMATION ON WATER AND SEWER LINE CROSSING SEE CITY STANDARD SPECIFICATION FOR WATER AND SEWER LINE CONSTRUCTION
2. STEEL CASING SHALL BE AS SPECIFIED IN THE TECHNICAL SPECIFICATIONS.
3. DRY BORING IS REQUIRED.
4. PIPE CROSSING A ROADWAY SHALL BE INSTALLED ABOVE THE MAIN IT TIES INTO WITH A BEND SUCH THAT THE CARRIER PIPE CAN BE PULLED ABOVE THE PARALLEL MAIN.

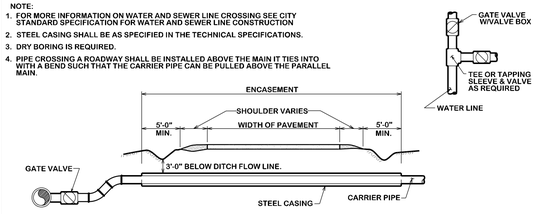

TYPICAL RURAL STREET CROSSING

W4-01

Ⓐ SELECT MATERIAL

MATERIAL EXCAVATED FROM THE DITCH. (WHICH IS FREE OF ROCKS, LUMPS, CLODS, OR DEBRIS LARGER THAN TWO (2) INCHES IN THE LARGEST DIMENSION), COMPACTED TO A MINIMUM OF 95% OF MAXIMUM DENSITY AS DETERMINED BY ASTM D698 (STANDARD) AT A MOISTURE CONTENT WITHIN OPTIMUM TO +4% OF OPTIMUM UNDER NON-STRUCTURAL AREAS (ie., YARDS, PASTURES, EASEMENTS) AND TO A MINIMUM OF 98% OF MAXIMUM DENSITY AS DETERMINED BY ASTM D698 (STANDARD) AT A MOISTURE CONTENT WITHIN OPTIMUM TO +4% OF OPTIMUM UNDER NEW STREET AREAS AND STREETS TO BE RECONSTRUCTED.

Ⓑ GRANULAR MATERIAL

MATERIAL SHALL BE SANK RUN RIVER SAND WHICH IS FREE OF DETRIMENTAL QUANTITIES OF CLAY, DEBRIS, OR ORGANIC MATERIAL AND WHICH, WHEN TESTED BY STANDARD LABORATORY METHODS, MEET THE FOLLOWING REQUIREMENTS:

MAXIMUM LIQUID LIMIT.....45
MAXIMUM PLASTICITY INDEX.....15
MAXIMUM PERCENT PASSING NO. 200 SIEVE.....35
MINIMUM PERCENT PASSING 3/4" SIEVE.....100

THE MATERIAL SHALL BE FREE FLOWING AND WHEN WET, SHALL NOT ADHERE TO FORM A BALL WHEN PRESSED IN THE HAND.

Ⓒ CEMENT STABILIZED SAND

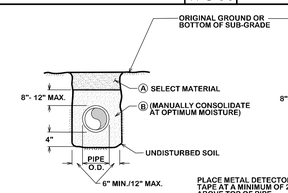

NON-STRUCTURAL
AREAS

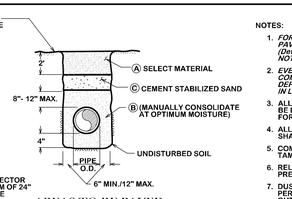

PLACE METAL DETECTOR
TAPE AT A MINIMUM OF 24"
ABOVE TOP OF PIPE

AREAS TO BE PAVED
OR STREETS TO BE
RECONSTRUCTED

NOTES:

1. *FOR BEDDING AND TRENCHING WITHIN ALL EXISTING PAVED AREAS, SEE DETAILS FOR OPEN CUT STREETS. (Details ST4-00, ST4-01, ST4-02). THIS NOTE DOES NOT APPLY TO STREETS BEING RECONSTRUCTED.*
2. *EVERY 100 FEET PROVIDE A WATER STOP BLOCK COMPOSED OF CEMENT SAND OR NATIVE MATERIAL DEPENDING ON EMBEDMENT. BLOCK SHALL BE 6 FEET IN LENGTH. NO BEDDING SAND IN THIS AREA.*
3. ALL BEDDING & INSTALLATION OF PVC PIPE SHALL BE IN ACCORDANCE WITH ANSI/AWWA STANDARDS FOR PVC PIPE.
4. ALL BEDDING & INSTALLATION OF DUCTILE IRON PIPE SHALL BE IN ACCORDANCE WITH ANSI/AWWA C150/A21.50
5. COMPACTION SHALL BE ATTAINED BY MECHANICAL TAMPING.
6. RELATIVE COMPACTION SHALL BE TESTED IN THE PRESENCE OF THE CITY ENGINEER.
7. DUST RESULTING FROM THE CONTRACTOR'S PERFORMANCE OF THE WORK, EITHER INSIDE OR OUTSIDE THE RIGHT-OF-WAY, SHALL BE CONTROLLED BY THE CONTRACTOR.
8. ALL TRENCHES SHALL BE BACK FILLED AND TEMPORARY PAVING OR PLATING PLACED AT THE END OF EACH WORKING DAY.

BEDDING AND TRENCH FOR DI PIPE & PVC PIPE

W4-02

GENERAL NOTES:

ALL AREAS WHERE EXISTING VEGETATION AND GRASS COVER HAVE BEEN BARED BY CONSTRUCTION SHALL BE ADEQUATELY BLOCK SODDED OR HYDROMULCHED AND WATERED UNTIL GROWTH IS ESTABLISHED. IN DEVELOPED AREAS WHERE GRASS IS PRESENT, BLOCK SOD WILL BE REQUIRED. BARED AREAS SHALL BE SEEDED OR SODDED WITHIN 14 CALENDAR DAYS OF LAST DISTURBANCE.

APPROVED EROSION CONTROL MEASURES MUST BE INSTALLED DURING THE ENTIRE TIME THAT EARTH HAS BEEN BARED BY CONSTRUCTION AND SHALL STAY IN PLACE UNTIL ACCEPTABLE VEGETATIVE GROWTH IS ESTABLISHED AFTER CONSTRUCTION IS COMPLETE AND THEN REMOVED BY CONTRACTOR.

ALL EROSION CONTROL MEASURES SHOULD BE CLEANED OF SILT AFTER EVERY RAIN.

ESTABLISHMENT OF VEGETATION MAY BE A WARRANTY ITEM.

REVISIONS:

BRYAN - COLLEGE STATION STANDARD WATER DETAILS

CITY OF COLLEGE STATION

CITY OF BRYAN
The Good Life, Texas Style.

DRAWN BY: C.L.M.
DATE: 08-01-12
SCALE: N T S
APPROVED: W. P. K.

FIGURE:
W1
SHEET 1 OF 2

SPECIAL CONDITIONS

1. METER REGISTER SHALL BE NO DEEPER THAN 12 INCHES BELOW FINISHED GRADE.
2. FLOOR OF VAULT WILL BE A MINIMUM OF 6 INCHES FROM BOTTOM OF ANY PIPING APPARATUS OR METER WITHIN THE VAULT.
3. REINFORCED CONCRETE VAULT BASE (FLOOR) SHALL BE CONSTRUCTED USING A STANDARD FIVE SACK CONCRETE MIX AND REINFORCING COMPRISED OF #3 REBAR ON 12 INCH CENTERS WITH A MINIMUM BASE THICKNESS OF 6 INCHES.
4. SET SCREW RETAINER GLANDS SHALL BE INSTALLED AT EACH FITTING ON MECHANICAL JOINT PIPE.
5. VALVES SHALL MEET THE CITY SPECIFICATIONS FOR VALVES.
6. THERE SHALL BE NO PIPING UNDER THE FLOOR OF THE VAULT.

MODEL	SIZE	L1	W1	H1	WEIGHT LBS
DMC-CS3	3"	8'-8"	5'-0"	4'-6"	12,000
DMC-CS4	4"	8'-8"	5'-0"	4'-6"	12,000
DMC-CS6	6"	11'-0"	6'-0"	4'-9"	12,000

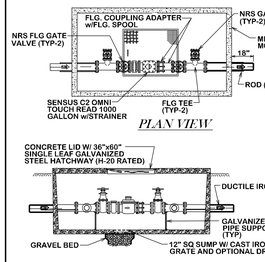

APPROVED 3" OR LARGER COMPOUND METERS, VAULTS & MATERIALS

APPROVED METERS - SENSUS SRH (U. S. GALLONS)

APPROVED VAULTS - PARK DMC-8R PRE-CAST CONCRETE VAULT W/ ADEQUATE ACCESS AND VAULT DIMENSIONS FOR METER SELECTED

APPROVED MATERIALS - DUCTILE IRON PIPE WITH MECHANICAL JOINT, SET SCREW RETAINER GLANDS WILL BE BASED ON ALL M.J. FITTINGS.

ANY DEVIATIONS FROM THE ABOVE SPECIAL CONDITIONS OR APPROVED METERS, VAULTS OR MATERIALS MUST BE SUBMITTED TO THE DIVISION MANAGER, WATER SERVICES, 72 HOURS PRIOR TO ANTICIPATED DEVIATION.

CITY OF COLLEGE STATION METER VAULT ASSEMBLY

W5-00

NOTES:

1. Service saddle, SS straps, CC threads Installed per manufacturer's recommendations. All main types: Smith Blair 317
2. Corporation Stop: Ford FB 1000-4-Q - 1"
3. Service tubing: Type K copper - soft - 1"
4. Ford male adapter - C84-44-Q - 1"
5. Meter box valve: 5 = Ford Angle Stop - BA13-342W - 1" 5A = Ford Straight Stop - B11-444W - 1"
6. Brass bushing IPS - 1" x 3/4"
7. Meter nipple - C38-23-2-5 - 3/4"
8. Meter box and lid: Old Castle meter box, CI lid with Reader #36

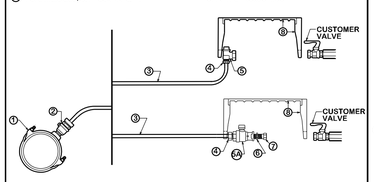

CITY OF BRYAN STRAIGHT OR ANGLE TAP - 3/4"

W6-00

NOTES:

1. Service saddle, SS straps, CC threads Installed per manufacturer's recommendations. All main types: Smith Blair 317
2. Corporation Stop: Ford FB 1000-4-Q - 1"
3. Service tubing: Type K copper - soft - 1"
4. Ford male adapter - C84-44-Q - 1"
5. Meter box valve: 5 = Ford Angle Stop - BA-13-444W-Q - 1" 5A = Ford Straight Stop - B11-444W - 1"
6. Meter nipple - C38-44-2-625 - 1"
7. Meter box and lid: Old Castle meter box, CI lid with Reader #36

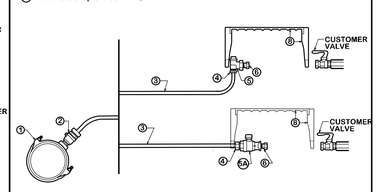

CITY OF BRYAN STRAIGHT OR ANGLE TAP - 1"

W6-01

NOTES:

1. Service saddle, SS straps, CC threads Installed per manufacturer's recommendations. All main types: Smith Blair 317
2. Corporation Stop: Ford FB 1000-6-Q - 1-1/2"
3. Service tubing: Type K copper - soft - 1-1/2"
4. Ford male adapter - C84-66-Q - 1-1/2"
5. Meter box valve: 5 = Ford Angle Stop - BA-11-666W - 1-1/2" 5A = Ford Straight Stop - B11-666W - 1-1/2"
6. Swivel nut - C38-66-2-875 - 1-1/2"
7. Brass all thread I.P.S. - 1-1/2"
8. Meter adapter - BBIM 66 - 1-1/2"
9. Meter box and lid: Old Castle meter box, CI lid with Reader #65

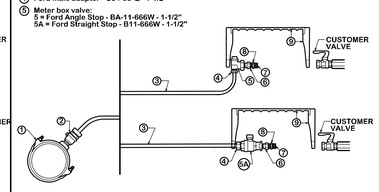

CITY OF BRYAN STRAIGHT OR ANGLE TAP - 1-1/2"

W6-02

NOTES:

1. Service saddle, SS straps, CC threads Installed per manufacturer's recommendations. All main types: Smith Blair 317
2. Corporation Stop: Ford FB 1000-4-Q - 1"
3. Service tubing: Type K copper - soft - 1"
4. Ford male adapter - C84-44-Q - 1"
5. Meter box valve: 5 = Ford Angle Stop - BA13-342W - 1" 5A = Ford Straight Stop - B11-444W - 1"
6. Brass nipple I.P.S. - 2" x 6"
7. Brass coupling I.P.S. - 2"
8. Swivel nut - C38-77 - 2"
9. Meter adapter - BBIM 77 - 2"
10. Brass nipple I.P.S. - 2" x 3"
11. Meter box and lid: Old Castle meter box, CI lid with Reader #65
12. Meter box and lid: Old Castle 12" round valve box #3RT

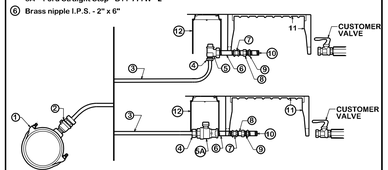

CITY OF BRYAN STRAIGHT OR ANGLE TAP - 2"

W6-03

NOTES:

1. ALL CONNECTIONS TO BE COMPRESSION TYPE.
2. MATERIAL USED SHALL BE AS SPECIFIED OR AN APPROVED EQUAL.
3. ALL SERVICE WYES & EXTENSIONS ARE TO BE INSTALLED WITH THE MAIN LINE CONSTRUCTION.
4. EXISTING METER BOXES ARE TO BE REMOVED. THE NEW METER BOXES SHALL BE OLD CASTLE.

METER NUT SIZE	FORD PART NO.
3/4" x 2.5" Long	C38-23-2-5
3/4" x 3" Long	C38-23-3
3/4" x 12" Long	C38-23-12
1" x 2.625" Long	C38-44-2-625
1" x 8.5" Long	C38-44-8-5
1-1/2" Meter Nipple	C38-66-2-875
1-1/2" Meter Bushing	BBIM-66
2" Meter Nipple	C38-77
2" Meter Bushing	BBIM-77

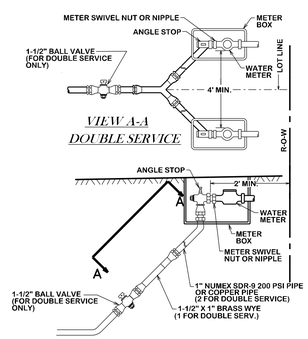

CITY OF BRYAN WATER SERVICE RECONNECTION

W6-04

NOTES:

1. Service saddle, SS straps, CC threads Installed per manufacturer's recommendations. All main types: Cambridge 800 Series or Ford S70/S90
2. Corporation Stop: Ford FB 1000-4- 1"
3. Service tubing: Type K copper - soft - 1"
4. Ford male adapter - C84-44- 1"
5. Meter box valve: 5 = Ford Angle Stop - BA13-342W - 1" 5A = Ford Straight Stop - B11-444W - 1"
6. Brass bushing IPS - 1" x 3/4"
7. Meter nipple - C38-23-2-5 - 3/4"
8. Ball valve
9. Meter box and lid: Old Castle meter box, CI lid with Reader #36

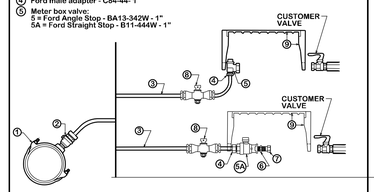

CITY OF COLLEGE STATION STRAIGHT OR ANGLE TAP - 3/4"

W7-00

NOTES:

1. Service saddle, SS straps, CC threads Installed per manufacturer's recommendations. All main types: Cambridge 800 Series or Ford S70/S90
2. Corporation Stop: Ford FB 1000-4- 1"
3. Service tubing: Type K copper - soft - 1"
4. Ford male adapter - C84-44- 1"
5. Meter box valve: 5 = Ford Angle Stop - BA-43-444W - 1" 5A = Ford Straight Stop - B11-444W - 1"
6. Meter nipple - C38-44-2-625 - 1"
8. Ball valve
9. Meter box and lid: Old Castle meter box, CI lid with Reader #36

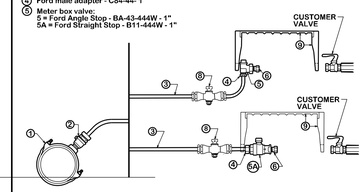

CITY OF COLLEGE STATION STRAIGHT OR ANGLE TAP - 1"

W7-01

NOTES:

1. Service saddle, SS straps, CC threads Installed per manufacturer's recommendations. All main types: Cambridge 800 Series or Ford S70/S90
2. Corporation Stop: Ford FB 1000-6- 1-1/2"
3. Service tubing: Type K copper - soft - 1-1/2"
4. Ford male adapter - C84-66- 1-1/2"
5. Meter box valve: 5 = Ford Angle Stop - FV-43-666W - 1-1/2" 5A = Ford Straight Stop - B11-666W - 1-1/2"
6. Swivel nut - C38-66-2-875 - 1-1/2"
7. Brass all thread I.P.S. - 1-1/2"
8. Meter adapter - BBIM 66 - 1-1/2"
9. Meter box and lid: Old Castle meter box, CI lid with Reader #65
10. Ball valve

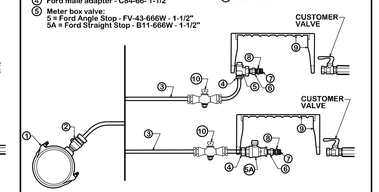

CITY OF COLLEGE STATION STRAIGHT OR ANGLE TAP - 1-1/2"

W7-02

NOTES:

1. Service saddle, SS straps, CC threads Installed per manufacturer's recommendations. All main types: Cambridge 800 Series or Ford S70/S90
2. Corporation Stop: Ford FB 1000-7 (cc thread) - 2"
3. Service tubing: Type K copper - cu - soft - 2"
4. Ford male adapter - C84-77- 2"
5. Meter box valve: 5 = Ford Angle Stop - FV-43-777W - 2" 5A = Ford Straight Stop - B11-777W - 2"
6. Brass nipple I.P.S. - 2" x 6"
7. Brass coupling I.P.S. - 2"
8. Swivel nut - C38-77 - 2"
9. Meter adapter - BBIM 77 - 2"
10. Brass nipple I.P.S. - 2" x 3"
11. Meter box and lid: Old Castle meter box, CI lid with Reader #65
12. Meter box and lid: Old Castle 12" round valve box #3RT
13. Ball valve

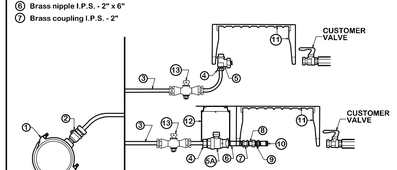

CITY OF COLLEGE STATION STRAIGHT OR ANGLE TAP - 2"

W7-03

NOTES:

1. ALL CONNECTIONS TO BE COMPRESSION TYPE.
2. MATERIAL USED SHALL BE AS SPECIFIED OR AN APPROVED EQUAL.
3. ALL SERVICE WYES & EXTENSIONS ARE TO BE INSTALLED WITH THE MAIN LINE CONSTRUCTION.
4. EXISTING METER BOXES ARE TO BE REMOVED. THE NEW METER BOXES SHALL BE OLD CASTLE.

METER NUT SIZE	FORD PART NO.
3/4" x 2.5" Long	C38-23-2-5
3/4" x 3" Long	C38-23-3
3/4" x 12" Long	C38-23-12
1" x 2.625" Long	C38-44-2-625
1" x 8.5" Long	C38-44-8-5
1-1/2" Meter Nipple	C38-66-2-875
1-1/2" Meter Bushing	BBIM-66
2" Meter Nipple	C38-77
2" Meter Bushing	BBIM-77

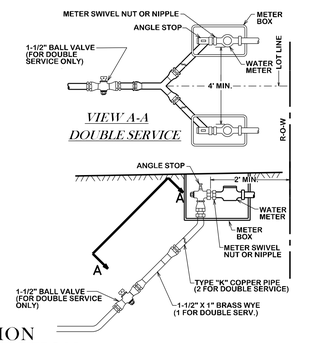

CITY OF COLLEGE STATION WATER SERVICE RECONNECTION

W7-04

REVISIONS:

BRYAN - COLLEGE STATION STANDARD WATER DETAILS

CITY OF COLLEGE STATION

CITY OF BRYAN
The Good Life, Texas Style.

DRAWN BY: C.L.M.
DATE: 08-01-12
SCALE: N T S
APPROVED: W. P. K.

FIGURE:
W2
SHEET 2 OF 2

CONTRACT DOCUMENTS AND SPECIFICATIONS
FOR
FIRST STREET UTILITY & STREET REHABILITATION
CITY JOB NO. 332-411-425-611-DE-1401
RFB # 14-068

TABLE OF CONTENTS
Section

- **Disclosure Statement**
- **Request for Bids**
- **Schedule of Events**
- **Project Scope**
- **BID PROPOSAL PAGES *(RETURN THIS SECTION WITH PROPOSAL)***
- **Statement of Bidder's Qualifications *(RETURN THIS SECTION WITH PROPOSAL)***
- **Special Provisions**
- **Technical Specifications**

CITY OF BRYAN STANDARD SPECIFICATIONS
(not included but made part of this contract)

- **City of Bryan Record of Excavation**
- **Policy Utility Installation Notifications**
- **Wage Scale**
- **Sales Tax Exemption Permit**
- **General Provisions and Requirements**
- **Sample Certificate of Insurance**
- **Contract**
- **Performance Bond**
- **Payment Bond**
- **Contractor's Affidavit of Bills Paid**

STATE OF TEXAS
JOHN RUSK
87884
LICENSED
PROFESSIONAL ENGINEER

7/28/2014

DISCLOSURE REQUIREMENTS

Chapter 176 of the Texas Local Government Code mandates the public disclosure of certain information concerning persons doing business or seeking to do business with the City of Bryan, including affiliations and business and financial relationships such persons may have with City of Bryan officers. An explanation of the requirements of Chapter 176, applicable forms and a complete text of the new law are available at:

http://www.bryantx.gov/departments/index.html?name=texas_ethics

If you are unable to obtain such information online, please contact the City of Bryan Purchasing Department, 1309 E. M. L. King Street, Bryan, Texas 77803 or call (979)209-5500.

BY DOING BUSINESS OR SEEKING TO DO BUSINESS WITH THE CITY OF BRYAN, YOU ACKNOWLEDGE THAT YOU HAVE BEEN NOTIFIED OF THE REQUIREMENTS OF CHAPTER 176 OF THE TEXAS LOCAL GOVERNMENT CODE AND THAT YOU ARE SOLELY RESPONSIBLE FOR COMPLYING WITH THEM.

REQUEST FOR BIDS

Sealed bids will be received by the City of Bryan at the Purchasing Department Office until September 10, 2014 publicly opened and read aloud at 10:00 am CDT, same date, on the following commodities or services:

FIRST STREET UTILITY & STREET REHABILITATION
City Job No.: 332-411-425-611-DE-1401
Bid Number: RFB # 14-068

Scope of work includes the following items:

- **Remove & dispose of existing Roadway Pavement**
- **Construct residential Roadway w/sidewalk**
- **Construct new water, sanitary & drainage facilities**
- **Traffic control, SWPPP, and related items**

A pre-bid conference is scheduled at September 2, 2014, at the Purchasing Department Conference Room at 1309 E. M. L. King Street, Bryan, Texas.

Bid forms, specifications and drawings may be secured at the Purchasing Department Office at 1309 E. M. L. King Street, Bryan, Texas 77803. These documents are available online at ***http://brazosbid.cstx.gov/***. These documents are also available on CDROM for no charge.

The City of Bryan reserves the right to accept or reject any or all bids, to waive any informalities and technicalities, to accept the offer considered most advantageous and to award the bid to the vendor offering the best value to the City of Bryan. Additionally all bidders are hereby notified that the City of Bryan shall consider all factors it believes to be relevant in the determination of the best value including, but not limited to, the proximity of the bidder as it relates to their ability to perform the contract for the City of Bryan.

WEB POST DATE: AUGUST 25, 2014

SCHEDULE OF EVENTS

- August 25, 2014 – Web site post date.

- September 2, 2014 @ 10:00 a.m. C.D.T.- Pre-bid meeting to be held in the Purchasing Office, 1309 E. M. L. King Street, Bryan, TX.

- September 4, 2014 @ 10:00 a.m. C.D.T. - Deadline for written requests for clarifications to the RFB.

- September 5, 2014 – Deadline to Issue Final Addendum

- September 10, 2014 @ 2:00 p.m. C.D.T – Sealed bids delivered to the Office of the Purchasing Department, City of Bryan, 1309 E. M. L. King Street, Bryan, TX. Bids received after the time and date set for the opening of the bid will not be accepted and will be returned unopened.

- September 23, 2014 Anticipated date of award

PROJECT SCOPE

FIRST STREET UTILITY & STREET REHABILITATION
City Job No.: 332-411-425-611-DE-1401
Bid Number: RFB # 14-068

This project consists of the following:

- **Remove & dispose of existing Roadway Pavement**
- **Construct residential Roadway w/sidewalk**
- **Construct new water, sanitary & drainage facilities**
- **Traffic control, SWPPP, and related items**

BID PROPOSAL INSTRUCTIONS

(Proposal)

The following items must be included with the bid when it is submitted. The City reserves the right to reject any bid for failure to comply with these requirements.

The bid documents (Proposal Pages) may be removed from the specification booklet and submitted with a bid bond or cashier's check. It is not necessary to include copies of the addendums. A space to acknowledge receipt of addendums is included in the bid documents.

- All bid proposals shall be accompanied by a **bid bond** in the amount of five percent (5%) of the total bid amount payable to the City of Bryan, from a surety company authorized to do business in Texas as a guarantee that the will enter into a contract and execute bonds within five (5) business days after notice of award. The bond must bear the impressed seal of the surety company and the name of the bidder, and be signed by the bidder and an authorized representative of the surety company. Powers of attorney must be attached to the bid bond.
- A **bid proposal** that has been fully completed and signed by the person authorized to represent the company submitting the bid. The proposal must use the same form or a photocopy of the form provided in the bid document. Acknowledgment of the receipt of any and all addenda to the bids must be provided on the proposal.
- If the bidder is a corporation, a copy of their **"Franchise Tax Certificate of Account Status"** showing all franchise taxes are current.
- A completed **"Statement of Bidder's Qualifications**" (this item may be submitted to the City within 3 working days of the bid opening for the proposal to be considered.
- All bidders must submit with their bid the "**Felony Conviction Notification form"** contained within this bid package. Failure to acknowledge and submit the completed Felony Conviction Notification form is sufficient cause for the bid to be rejected.

Additional information regarding these items is provided in the Proposal Pages that follow.

Bidders on this work will be required to comply with the President's Executive Order No. 11246 regarding non-discrimination in employment. The requirement for bidders and contractors under this order are available at the City of Bryan Purchasing Department.

In order to ensure a fair and public bid process, all questions related to this Request for Bid shall be addressed in writing via the ***Brazos Valley Online Bidding System (http://brazosbid.cstx.gov/)****.* ***Questions shall be submitted in writing to Susan Chmelar, schmelar@bryantx.gov, prior to 10:00 a.m. CDT on September 4, 2014.*** *Contact with any City of Bryan employee or official is prohibited without prior written consent from the City Purchasing Supervisor. Failure to observe this requirement may be grounds for rejection of the Bid.*

CITY OF BRYAN
PROPOSAL

Date: September 11,2014

Proposal of ELLIOTT CONSTRUCTION, LLC

a corporation organized and existing under the laws of the State of Texas ;

or a partnership consisting of _____ ;

or an individual trading as _____ :

TO THE CITY OF BRYAN
BRYAN, TEXAS

The undersigned hereby proposes to furnish all labor and material, tools, and necessary equipment, for the construction of the project, and to perform the work required for the construction of the said project, at the locations set out by the plans and specifications, in strict accordance with the contract documents.

The undersigned further agree to execute a contract within 5 business days from the date of notice of intent to award this proposal, or within such time as the City of Bryan may determine, and in case the undersigned fails or neglects to appear to execute the contract within the specified time, of which this proposal, the plans, specifications, special provisions and advertisements are a part, the undersigned will be considered as having abandoned it, and the Cashier's Check or Bidder's Bond in the sum of five percent of greater amount bid ($ %5 GAB) Dollars accompanying this proposal will be forfeited to the City of Bryan, Texas, by reason of such failure on the part of the undersigned.

The undersigned further agree that the proposal guaranty may be retained by the City of Bryan, Texas provided the under-signed is one of the three lowest and most advantageous bidders, and that said proposal guaranty shall remain with the City of Bryan until the contract has been made by the successful bidder; otherwise, proposal guaranty may be obtained from the City Purchasing Manager after forty-eight hours from the time of opening the bids.

The undersigned certify that they are duly authorized to submit this Proposal and that this Proposal is made in good faith without collusion or connection with any other person, persons, partnership, company, firm, association or corporation offering bids on this work, and to do the work for the following bid item unit prices, their associated extended totals and sum of extended totals as listed on the following bid tabulation forms:

BID PROPOSAL
Bid Schedule for First Street Utility
Street Rehabilitation Project
City of Bryan Job No. 332-411-425-611-DE-1401
RFB # 14-068

ITEM	DESCRIPTION	QTY	UNIT	UNIT PRICE	TOTAL
A. GENERAL ITEMS					
1	Mobilization, setup, & project overhead for all equipment, work on project, including related items & appurtenances, complete in place.	1	LS	$21,000.00	$21,000.00
2	Traffic control, including all signage, temporary paving, cones, striping, buttons and related items & appurtenances, complete in place	1	LS	$7,000.00	$7,000.00
3	Field locate existing utilities and service lines for construction of the proposed improvements including related items and appurtenances, complete in place	1	LS	$3,500.00	$3,500.00
4	Durham 1092 single mailbox, product number N1026013M including related items & appurtenances, complete in place	5	EA	$560.00	$2,800.00
TOTAL SECTION A - GENERAL				**$34,300.00**	
B. DEMOLITION ITEMS					
5	Remove & dispose of existing storm sewer inlet/junction boxes including related items & appurtenances, complete in place	1	LS	$1,100.00	$1,100.00
6	Remove & dispose of existing storm sewer pipe including related items & appurtenances, complete in place	1	LS	$4,500.00	$4,500.00
7	Remove & dispose of existing roadway/driveway/sidewalk pavement including curbs & gutters including related items & appurtenances, complete in place	1	LS	$16,500.00	$16,500.00
8	Remove & dispose of existing trees/shrubs including related items & appurtenances, complete in place	1	LS	$1,000.00	$1,000.00
9	Remove & relocate existing signs including related items & appurtenances, complete in place	1	LS	$500.00	$500.00
10	Remove & dispose of existing mailboxes including related items & appurtenances, complete in place	1	LS	$300.00	$300.00
11	Remove & dispose of existing valves & boxes including related items & appurtenances, complete in place	1	LS	$800.00	$800.00
TOTAL SECTION B - DEMOLITION				**$24,700.00**	
C. PAVING ITEMS					
12	R.O.W. preparation including all dirtwork for roadway and driveways including related items & appurtenances, complete in place	4.5	STA	1100	$4,950.00
13	6" lime stabilized base with minimum of 6% lime by weight compacted to an apparent dry density of 98% standard proctor density @ optimum moisture content including related items and appurtenances, complete in place	1,835	SY	$6.00	$11,010.00
14	Lime for sub-grade stabilization including related items and appurtenances, complete in place	28	Tons	$205.00	$5,740.00
15	6" Reinfored concrete roadway & driveway paving including related items & appurtenances, complete in place	1,711	SY	$54.50	$93,249.50
16	Monolithic Curb, including related items & appurtenances, complete in place	815	LF	$5.00	$4,075.00
17	4" Reinforced concrete sidewalk including curb including subgrade preparation and compaction to 98% standard proctor density @ optimum moisture content including related items and appurtenances, complete in place	165	SY	$50.00	$8,250.00
TOTAL SECTION C - PAVING				**$127,274.50**	
D. DRAINAGE ITEMS					
18	36" RCP storm sewer w/full depth cement stabilized sand backfill including related items & appurtenances, complete in place	419	LF	$128.00	$53,632.00

BID PROPOSAL
Bid Schedule for First Street Utility
Street Rehabilitation Project
City of Bryan Job No. 332-411-425-611-DE-1401
RFB # 14-068

ITEM	DESCRIPTION	QTY	UNIT	UNIT PRICE	TOTAL
19	30" RCP Storm Sewer w/full depth cement stabilized backfill including related items & appurtenances, complete in place	27	LF	$114.00	$3,078.00
20	24" RCP storm sewer w/full depth cement stabilized backfill including related items & appurtenances, complete in place	100	LF	$98.00	$9,800.00
21	18" RCP storm sewer w/full depth cement stabilized backfill including related items & appurtenances, complete in place	54	LF	$96.00	$5,184.00
22	5' curb inlet including top, ring, lid, grouting of bottom & storm sewer w/related items & appurtenances, complete in place	6	EA	$3,200.00	$19,200.00
23	15' curb inlet including top, ring, lid, grouting of bottom & storm sewer w/related items & appurtenances, complete in place	1	EA	$6,470.00	$6,470.00
24	Concrete rip-rap (slope paving), including related items and appurtenances, complete in place.	14	SY	$81.00	$1,134.00
25	5' X 5' concrete junction box including top, ring, lid, grouting of bottom & storm sewer w/related items & appurtenances, complete in place	1	EA	$4,680.00	$4,680.00
26	3'x3' grate inlet box including top, box & grouting of bottom with related items & appurtenances, complete in place	2	EA	$1,980.00	$3,960.00
27	TV'ing of storm sewer including related items and appurtenances, complete in place	600	LF	$2.00	$1,200.00
TOTAL SECTION D - DRAINAGE				**$108,338.00**	
E. SANITARY SEWER ITEMS					
28	6" SDR 26 PVC sanitary sewer line with cement stabilized sand backfill including related items and appurtenances, complete and in place	364	LF	$79.00	$28,756.00
29	18" SDR 26 PVC sewerline with cement stabilized sand backfill, including related fittings, items and appurtenances, complete in place	112	LF	$135.00	$15,120.00
30	4' Standard sanitary sewer manhole including base, sections, cone, rim, lid and related items and appurtenances, complete in place	1	EA	$3,025.00	$3,025.00
31	5' Standard sanitary sewer manhole including base, sections, cone, rim, lid & related items & appurtenances, complete in place	2	EA	$4,700.00	$9,400.00
31	Long Sewer Service including fittings, cleanout, pipe to row, with related items & appurtenances, complete in place	4	EA	$1,145.00	$4,580.00
32	Short Sewer Service including fittings, cleanout, pipe to row, with related items & appurtenances, complete in place	2	EA	$1,115.00	$2,230.00
33	4" sanitary sewer service line installed by licensed plumber, including related fittings, items and appurtenances, complete in place	157	LF	$20.00	$3,140.00

BID PROPOSAL
Bid Schedule for First Street Utility
Street Rehabilitation Project
City of Bryan Job No. 332-411-425-611-DE-1401
RFB # 14-068

ITEM	DESCRIPTION	QTY	UNIT	UNIT PRICE	TOTAL
34	Connect proposed 4" service line to existing house plumbing by licensed plumber, including related items & appurtenances, complete in place	2	EA	$200.00	$400.00
35	Concrete Pavement Repair including related items and appurtenances, complete in place	14	SY	$66.00	$924.00
36	6" FUNCO Connection w/concrete collar including related items and appurtenances, complete in place	1	EA	$150.00	$150.00
37	18" FUNCO Connection w/concrete collar repair including related items and appurtenances, complete in place	1	EA	$500.00	$500.00
38	TV'ing of sanitary sewer including related items and appurtenances, complete in place	364	LF	$2.75	$1,001.00
TOTAL SECTION E - SANITARY SEWER				**$69,226.00**	
F. WATER SYSTEM ITEMS					
39	6" C-900 PVC waterline including related fittings, items and appurtenances, complete in place	715	LF	$27.00	$19,305.00
40	6" C-900 PVC waterline installed by boring including related fittings, items and appurtenances, complete in place	110	LF	$67.00	$7,370.00
41	6" Gate valve & box, including related items and appurtenances, complete in place	3	EA	$820.00	$2,460.00
42	2" Blow off valve including related items & fittings & appurtenances, complete in place	1	EA	$1,315.00	$1,315.00
42	Concrete pavement repair for waterline, including related items and appurtenances, complete in place	1	LF	$60.00	$60.00
43	Relocate & reconnect existing water meter, including related items and appurtenances, complete in place	3	EA	$345.00	$1,035.00
44	Short water service transfer, including related items and appurteanances, complete in place	6	EA	$700.00	$4,200.00
45	Long water service transfer, including related items and appurtenances, complete in place	3	EA	$1,315.00	$3,945.00
46	Standard fire hydrant assembly, including related items and appurtenances, complete in place	1	EA	$3,400.00	$3,400.00
47	Interconnect proposed 6" to existing 2", 6" bling flange, 6" plug & 2" tap including related fittings, items and appurtenances, complete in place	2	EA	$1,925.00	$3,850.00
48	14" steel casing (3/8" thickness) installed by open cut with cement stabilized sand backfill, including related items & appurtenances, complete in place	20	LF	$165.00	$3,300.00
TOTAL SECTION F - WATER SYSTEM				**$50,240.00**	
TOTAL (SECTIONS A-F)……..……				**$414,078.50**	

FELONY CONVICTION NOTIFICATION

Any person and/or business entity that enters into a contract with the City of Bryan must give advance notice to the City if any employee or an owner or operator of the business entity has been convicted of a felony. The notice must include a general description of the conduct resulting in the conviction of a felony. The notice must also describe the role that the employee, owner, or operator will perform in executing the contract. The City may require substitution of employees in the performance of the contract.

The City may terminate a contract with a person or business entity if the City determines that the person or business entity failed to give notice as required by this clause, misrepresented the conduct resulting in the conviction, or failed to substitute personnel at City's request.

I, the undersigned agent for the firm named below, certify that the information concerning notification of felony convictions has been reviewed by me and the following information furnished is true to the best of my knowledge.

Vendor's Name:

_____

Authorized Company Official's Name (Printed)

A. My firm is not owned or operated by anyone who has been convicted of a felony nor does it have any employees who have been convicted of a felony:

Signature of Company Official:

_____

B. My firm has employee(s) or is owned or operated by the following individual(s) who has/have been convicted of a felony

_____ _____

_____ _____

Signature of Company Official:

_____

C. Provide a general description of the conduct resulting in the conviction of a felony.

_____

_____

_____

Signature of Company Official:

D. Describe the role that the person(s) convicted of a felony will play in the performance of the contract.

_____

_____

_____

Signature of Company Official:

_____

CERTIFICATION OF BID

CERTIFICATION and AUTHORIZATION:
RFB # 14-068

The undersigned certifies that he has fully read and understands this "Request for Bid" and has full knowledge of the scope, quantity, and quality of the services and materials to be furnished and intends to adhere to the provisions described herein. The undersigned also affirms that they are duly authorized to submit this Bid, that this Bid has not been prepared in collusion with any other Vendor, and that the contents of this Bid have not been communicated to any other Vendor prior to the official opening of this Bid. Additionally, the undersigned affirms that the firm is willing to sign the enclosed Exhibit A, Standard Form of Contract, if awarded the bid.

Signed By: _____ Title: _____

Typed Name: _____ Company Name: _____

Phone No.: _____ Fax No.: _____

E-mail: _____

Bid Address: _____

P.O. Box or Street City State Zip

Order Address: _____

P.O. Box or Street City State Zip

Remit Address: _____

P.O. Box or Street City State Zip

Federal Tax ID No.: _____

Date: _____

The undersigned hereby declares that he has visited the sites and has carefully examined the plans, specifications and contract documents relating to the work covered by his bid or bids, that he agrees to do the work, and that no representations made by the City are in any sense a warranty, but are mere estimates for the guidance of the Contractor.

All bid proposals shall be accompanied by a bid bond in the amount of five percent (5%) of the total bid amount payable to the City of Bryan, from a surety company authorized to do business in Texas as a guarantee that the will enter into a contract and execute bonds within five (5) business days after notice of award. The bond must bear the impressed seal of the surety company and the name of the bidder, and be signed by the bidder and an authorized representative of the surety company. Powers of attorney must be attached to the bid bond.

TIME OF COMPLETION : The undersigned agrees to complete the work within **One Hundred Twenty (120)** working days from the date designated by the Notice to Proceed.

The undersigned further declares that he will provide all necessary tools, and apparatus, do all the work, and furnish all materials, and do everything required to carry out the above mentioned work covered by this proposal, in strict accordance with the contract documents, and the requirements pertaining thereto, for the sum or sums above set forth. Additionally, the undersigned affirms that the firm is willing to sign the City's Standard Form of Contract as reflected in the specifications, if awarded the contract.

Acknowledgement for Receipt of Addendums:

Addendum Number One Initial _____

Addendum Number _____ Initial _____

Addendum Number _____ Initial _____

Respectfully Submitted,

_____
Scott Elliott (Signature)

Note: Do not detach bid from other papers. Fill in with ink and submit complete with attached papers.

P.O. Box 510
(Address)

Wellborn, Texas 77881-0510
(City, State, Zip)

STATEMENT OF BIDDER'S QUALIFICATIONS

Bidders who have not had a contract with the City of Bryan within the last five years must furnish sufficient written evidence that single bona fide contract, in excess of two-thirds of the face amount of this bid, have been successfully and satisfactorily completed on work of a similar nature. This evidence shall be furnished on the form that follows. The contractor must show job locations, type of projects, contract amounts, and dates completed. This information must also be furnished for any proposed subcontractors. Failure to submit this evidence shall be just cause for disqualification of the bid. The successful bidder, at the discretion of the City Council, may be required to furnish a complete financial statement prepared and certified to by a Certified Public Accountant.

STATEMENT OF BIDDER'S QUALIFICATIONS (Continued)

Name of Company: _____

Years in Business: _____

A. REFERENCES: List projects on which a similar type of work was performed within the past five years.

1.

Project Name:	_____	Completed Cost:	_____
Describe work:	_____		
Owner:	_____	Date Completed:	_____
Contact Person:	_____	Phone Number:	_____

2.

Project Name:	_____	Completed Cost:	_____
Describe work:	_____		
Owner:	_____	Date Completed:	_____
Contact Person:	_____	Phone Number:	_____

3.

Project Name:	_____	Completed Cost:	_____
Describe work:	_____		
Owner:	_____	Date Completed:	_____
Contact Person:	_____	Phone Number:	_____

4.

Project Name:	_____	Completed Cost:	_____
Describe work:	_____		
Owner:	_____	Date Completed:	_____
Contact Person:	_____	Phone Number:	_____

5.

Project Name:	_____	Completed Cost:	_____
Describe work:	_____		
Owner:	_____	Date Completed:	_____
Contact Person:	_____	Phone Number:	_____

6.

Project Name:	_____	Completed Cost:	_____
Describe work:	_____		
Owner:	_____	Date Completed:	_____
Contact Person:	_____	Phone Number:	_____

STATEMENT OF BIDDER'S QUALIFICATIONS
(Continued)

B. Superintendent (field) & Project Manager (office) proposed for the project, years of experience in their position, and list of projects, which they managed.

Projects that were managed by Superintendent:

Superintendent's Name: _____ Number of Years Experience: _____

Projects

Project Name: _____ City/State: _____

Project Name: _____ City/State: _____

Project Name: _____ City/State: _____

Project Name: _____ City/State: _____

Project Name: _____ City/State: _____

Project Name: _____ City/State: _____

Projects that were managed by Project Manager:

Project Manger's Name: _____ Number of Years Experience: _____

Projects

Project Name: _____ City/State: _____

Project Name: _____ City/State: _____

Project Name: _____ City/State: _____

Project Name: _____ City/State: _____

Project Name: _____ City/State: _____

Project Name: _____ City/State: _____

SPECIAL PROVISIONS

First Street Utility &
Street Rehabilitation Project

CITY JOB NO. 332-411-425-611-DE-1401

SPECIAL PROVISIONS-TABLE OF CONTENTS

SECTION NUMBER	DESCRIPTION
SP 1.	City Project Manager
SP 2.	Conflict Resolution
SP 3.	Design Engineer
SP 4.	Mobilization and Project Overhead
SP 5.	Solid Waste Coordination
SP 6.	General
SP 7.	Demolition Items
SP 8.	Submittals
SP 9.	Content of Project
SP 10.	Field Staking
SP 11.	Silt Fencing & Storm Water Pollution Prevention Plan
SP 12.	Traffic Control and Traffic Control Plan
SP 13.	Project Standards
SP 14.	Construction Sequencing
SP 15.	Payment for Excavation/Embankment

SP 1. CITY PROJECT MANAGER:

Susan Monnat, P.E.
P.O. Box 1000
Bryan, TX 77805
979-209-5030

SP 2. CONFLICT RESOLUTION:

In the absence of specific details or specifications in these contract documents applicable design and details the contractor shall conform to the City of Bryan Technical Specifications and Standard Construction Details latest revision, http://www.bcsunited.net/. If any conflicts or difference in interpretation exist between these contract documents, referenced or published standards, the City of Bryan requirements, or TCEQ requirements the strictest requirement shall govern.

SP 3. DESIGN ENGINEER:

The design engineer for this project is Goodwin-Lasiter-Strong. The address of that firm is 4077 Cross Park Drive, Suite 100, Bryan, TX 77802. The phone number is 979-776-9700. The project manager is John Rusk, P.E.

SP 4. MOBILIZATION AND PROJECT OVERHEAD:

The bid item "Mobilization and Project Overhead" shall include and not be limited to the following: cost to mobilize and demobilize equipment to the project site, sediment control, construction staking, the cost of bonds and insurance, and all other incidental costs associated with the project. Payment will be made in accordance with the technical specifications.

SP 5. SOLID WASTE COORDINATION:

Construction is not to impede weekly waste collection. Crestview waste and brush & bulky service each occur once per week (not typically on the same day). The schedules are available at the City of Bryan's website www.bryantx.gov or can be reached directly at the following link http://gis.bryantx.gov/gis/website/waste_collection/viewer.htm or obtained through the City of Bryan's Environment Services Department.

The contractor is to work with the City of Bryan Solid Waste Division to make certain the impact to citizens is minimized. The city may be able to schedule pickup early on particular streets so that construction delay is minimized. The contractor is to work with the city as needed including scheduling, assisting in relocating garbage cans, etc. Whenever city garbage collection trucks are denied vehicular access to residential curb side pickup the contractor must collect the filled cans from each property and locate them in an area accessible to the collection truck prior to scheduled pickup. The contractor must also return the empty cans that day. Cans that are not addressed are interchangeable amongst properties. The contractor may want to note on the door hanger notifications that residential waste and brush and bulky pickup will occur on regularly scheduled days but that pick-up will occur as early as 7:00 a.m. during this time to facilitate construction.

SP 6. GENERAL:

The Bidders are expected to familiarize themselves thoroughly with the requirements contained in the General Specifications, Special Provisions, Project Data, Technical Specifications, Texas Department of Transportation (TxDOT) 1993 Standard Specifications, and the current TxDOT Material Specifications. The provisions contained herein shall govern in case of conflict with any item in the General Specifications. All references to the American Standard of Testing Materials (ASTM) and other organizations shall be interpreted to mean the latest published edition as of the date proposals are opened for this project, unless specifically referenced by date or version.

Two trench failure accidents in the last 5 years or one death caused by a trench failure accident in the last 5 years will constitute grounds for disqualification of a bidder. This is not automatic however. The City will review corrective action taken and preventative measures employed by firms that exceed the foregoing criteria.

The Bidder will accomplish the entire contract with his own forces unless City of Bryan is notified, prior to bid opening, and has approved any planned work by authorized subcontractors. Bidders shall identify the names of subcontractors they intend to employ and the approximate percent work to be performed by each subcontractor. This information shall be furnished with bids.

Any inquiries concerning this project prior to Bid Opening shall be directed to:

City of Bryan – Purchasing Department
ATTN: Susan Chmelar
schmelar@bryantx.gov

SP 7. DEMOLITION ITEMS:

Prospective bidders are to make their own determination of the quantities for demolition. Quantities are listed within the construction plans. These quantities are estimates intended to aid in the bidding process. Additional payment for quantities exceeding those within the plans will not be made.

SP 8. SUBMITTALS:

The Contractor shall submit to the City's Project Manager for review, and approval, the following items prior to the work order being issued:

- Work Plan indicating sequence and schedule
- Material Storage Location
- Subcontractors to be used if applicable
- Pipe material product specifications
- Cement Stabilized Sand Mix Design
- Concrete Mix Designs
- Reinforcing Steel
- Fill Material – Atterberg Limits / Moisture-Density Relationship
- Test reports showing conformance of specific properties of crushed limestone flexible base and asphaltic materials for prime and tack coat.
- Test reports for all required tests
- Signal & related items submittals
- Pavement marking submittals

Deliver submittals to the City Engineer's office to the attention of the City's Project Manager. Transmit each item by document with format acceptable to the City, which identifies the following: Project Name and Project Job No.; Contractor; Subcontractor; Supplier; Pertinent Drawing Sheet and detail number; and Specification section as appropriate. Identify deviations from Contract Documents. Provide space for Contractor and City review stamps.

Submit drawings, data and samples to the City at least 14 working days prior to date the Contractor needs the reviewed submittals returned. Contractor shall submit the number of copies of product data and samples, which the Contractor and his subcontractor need for their use plus two (2) additional sets for the City Engineer. Contractor shall revise and resubmit as required, identifying changes made since previous submittal.

SP 9. CONTENT OF PROJECT:

Contractor is to furnish project complete as required in the specifications, Drawings and Contract Documents. Items not specifically covered in these documents which comprise a part of the project shall be considered incidental to the project. Contractor is to consider all incidental work necessary for a satisfactory and completed project and is to include any related costs in the original prices bid.

SP 10. FIELD STAKING:

Contractor is responsible for staking and layout of roadway, drainage, and water facilities for construction. Cut-sheets are to be prepared by a Registered Public Land and submitted 2 days prior to construction. Contractor will not be allowed to proceed until cut sheets have been submitted.

SP 11. SILT FENCING & STORM WATER POLLUTION PREVENTION PLAN:

The Contractor shall be responsible for implementation, maintenance, and inspection of storm water pollution prevention control measures including, but not limited to, erosion and sediment controls, storm water management plans, waste collection and disposal, off-site vehicle tracking, and other practices. Contractor's construction operations shall be in accordance with the terms and conditions of the National Pollutant Discharge Elimination System (NPDES) Permit, as stated in the Federal Register Vol. 57 No. 175, issued by the Environmental Protection Agency on September 9, 1992.

Steps shall be taken to prevent sediment from leaving construction site. Sand bags shall be used in locations downstream of construction areas and in front of all drainage structures to collect sediments from storm water runoff. Silt fencing shall be maintained (as applicable) during all phases of construction until vegetative or pavement ground cover is re-established. The Contractor, when working within the roadway, should provide material on roadway for placement of excavated material. Materials include plywood, fabric, etc. Coordinate material to be used with City Engineer.

No separate payment shall be made for work related to storm water pollution prevention. Include costs in related work.

SP 12. TRAFFIC CONTROL AND TRAFFIC CONTROL PLAN

First Street, through the project area shall be closed to thru traffic. Residents and business owners shall be allowed access to their driveways. Dellwood Street shall remain open. A traffic control plan is to be submitted by Contractor. Contractor to maintain and adjust plan as needed. All signs and barricades are to be in accordance with the latest edition of the Texas MUTCD. Lane closures shall be coordinated

with the City. Contractor shall notify residents & businesses two (2) days prior to any lane closures. TCP must be sealed by a licensed professional engineer.

SP 13. PROJECT STANDARDS

All work shall comply with the Texas Department of Transportation's Standard Specifications for Construction and Maintenance of Highways, Streets, and Bridges, 2004 edition; the design standards included in the design plans; the latest versions of the Bryan/College Station Unified Design Manual, Technical Specifications, & Standard Construction Details; City of Bryan Building Coeds; Texas Commission on Environmental Quality Standards (TCEQ) and Texas Manual on Uniform Traffic Control Devices (MUTCD) Revision1, November 2012. If conflicts exist among the requirements, the more stringent apply.

SP 14. CONSTRUCTION SEQUENCING

Contractor is to submit a construction sequencing plan as a submittal. Gravity lines, sanitary & storm sewers shall be constructed before water. The plan shall outline the proposed sequence of construction, with specific timeline, lane closures, and removal.

SP 15. PAYMENT FOR EXCAVATION/EMBANKMENT:

Payment for Excavation/Embankment shall be included PER 100' STATION as per Bid Item. The measurement within the Technical Specification 302 is hereby amended. Contractor is to make his own determination and adjust alternate accordingly for right of way preparation.

TECHNICAL SPECIFICATIONS

First Street Utility &
Street Rehabilitation Project

CITY JOB NO. 332-411-425-611-DE-1401

GENERAL:

Spec 01 30 00..... Digital Construction Pictures
Spec 01 55 26..... Traffic Control
Spec 01 58 00..... Project Identification (City of Bryan Only)
Spec 01 71 13..... Mobilization
Spec 01 71 23..... Construction Surveying
Spec 02 41 13.13 ..... Removal of Existing Concrete
Spec 03 30 00..... Concrete
Spec 03 30 01..... Concrete Blocking or Anchorage
Spec 03 34 00..... Flowable Fill Existing Line
Spec 04 05 12..... Mortar and Grout
Spec 09 03 12..... Conductive Trace Wire for Water Pipe and Sewer Force Main Installation
Spec 31 11 00..... Clearing and Grubbing
Spec 31 23 23.53 ..... Cement Stabilized Sand Backfill
Spec 31 23 33..... Excavating, Trenching, and Backfilling
Spec 31 25 13..... Erosion and Sedimentation Control
Spec 31 50 00..... Trench Safety
Spec 31 78 00..... Pipe Boring, Jacking, Tunneling and Encasement
Spec 32 92 13..... Hydro-Mulch Seeding
Spec 32 92 19..... Seeding for Erosion Control
Spec 32 92 23..... Sodding for Erosion Control (Block Sodding)
Spec 33 05 01..... Polyvinylchloride Pipe and Fittings
Spec 33 05 02..... Ductile Iron Pipe

STREETS:

Spec 31 23 00..... Excavation and Embankment
Spec 32 11 16..... Subgrade Preparation and Compaction
Spec 32 11 29..... Lime Stabilization
Spec 32 11 29.01..... Sprinkling
Spec 32 11 29.02..... Rolling
Spec 32 13 13..... Concrete Pavement
Spec 32 16 13..... Concrete Curb and Gutter
Spec 32 16 13.01 ..... Concrete Sidewalk

SANITARY SEWER:

Spec 33 01 30.13 ..... Testing for Sanitary Sewage Gravity System
Spec 33 31 13..... Sanitary Sewer System
Spec 33 39 13..... Manholes
Spec 32 39 14..... Sewer Services
Spec 33 39 14.01..... Connection of New Lines to Existing Manholes

WATER:

Spec 33 11 13.1 ..... Water Main Construction
Spec 33 12 13..... Water Services
Spec 33 12 16 ..... Main Line Valves
Spec 33 12 19..... Fire Hydrants
Spec 33 13 00..... Disinfection of Water Lines
Spec 33 13 10..... Hydrostatic Tests

DRAINAGE:

Spec 33 40 01..... Storm Drainage System
Spec 33 40 02 ..... Reinforced Concrete Pipe
Spec 33 40 03..... Standard Storm Sewer Inlets
Spec 33 40 04..... Reinforced Concrete Riprap
Spec 33 40 05..... Reinforced Concrete Headwalls and Endwalls
Spec 33 41 16 ..... Drainage Channel Excavation
Spec 33 42 16.13..... Precast Reinforced Concrete Box Culverts

SECTION 01 30 00

DIGITAL CONSTRUCTION PICTURES

(Sentences and/or paragraphs that are double underlined indicate revisions that were made from the 2009 specification.)

PART 1 - GENERAL

1.1 DESCRIPTION

A. The Contractor is required to photographically document site conditions prior to the start and during construction operations. Provide monthly, and within one month of the completion of work, photographs, 1200x800 pixels, 360dpi true color minimum resolution in JPEG file format showing the sequence and progress of work, devices, equipment, material and fitting installations.

1.2 MEASUREMENT AND PAYMENT

A. The digital photographs serve as one of the methods of documentation of the work performed each month and the associated monthly invoice will not be processed without them. Photographs shall be provided for unrestricted use by the City.

1.3 SUBMITTALS

A. Take a minimum of 20 digital photographs each week (more may be required to accurately document work). Photographs for each month shall be in a separate monthly directory with the orientation and location of the valves, manholes, pipe connections and other appurtenances annotated on the construction drawings and the photograph. The view in each photograph shall include a sign showing the date, name of project, station designation, name of item being photographed, and direction camera is facing. The sign shall not block the important areas of the view and shall be legible in a three and one half inch by five inch (3-1/2" x 5") print. All prints shall show good details in both shadow and sunlit areas. Submit digital photographs and associated construction drawing with the monthly invoice on a CD-R, cumulative of all photos to date.

PART 2 – PRODUCTS

N/A

PART 3 – EXECUTION

N/A

END OF SECTION

SECTION 01 55 26

TRAFFIC CONTROL

PART 1 - GENERAL

1.1 DESCRIPTION

A. This Specification includes the general description of the "TRAFFIC CONTROL" and the requirements of that plan. This specification applies to the furnishing of all labor, equipment, and materials and in performing all operations in connection with the "TRAFFIC CONTROL" in accordance with the plans and these specifications.

1.2 MEASUREMENT AND PAYMENT

The work and materials as prescribed by this item will be paid on the following schedule:

A. 50% of the bid value shall be paid when the traffic control plan is fully implemented, and all of the initial traffic control devices have been installed and are in working order.

B. 25% of the value will be prorated for the installation and maintenance of traffic control devices during the course of construction as a percent of the total contract value.

C. 25% will be paid at the completion of construction and all traffic control devices are removed from the site.

1.3 SUBMITTALS

A. The contractor shall submit a "TRAFFIC CONTROL PLAN" or modifications to the plan provided in the construction documents prior to commencing construction. All plans must be in accordance with the Texas Manual of Uniform Traffic Control Devices requirements. No plan may be implemented until approved by the Engineer.

PART 2 – PRODUCTS

N/A

PART 3 – EXECUTION

3.1 CONSTRUCTION METHODS

A. The "TRAFFIC CONTROL PLAN" and the installation of all devices should be continuously reviewed and updated to reflect the current stage of construction. The inspector may review minor changes; the engineer shall review major changes. The construction foreman shall provide the current "TRAFFIC CONTROL PLAN" to the inspector upon request on the site at any time during the construction of the project.

END OF SECTION

SECTION 01 58 00

PROJECT IDENTIFICATION (CITY OF BRYAN ONLY)

PART 1 - GENERAL

1.1 REFERENCES

AMERICAN WOOD PROTECTION ASSOCIATION (AWPA)

APWA C1	(2003) All Timber Products – Preservative Treatments by Pressure Processes
AWPA C2	(2003) Lumber, Timber, Bridge Ties and Mine Ties – Preservative Treatment by Pressure Processes

1.2 PROJECT IDENTIFICATION SIGNBOARD

A project identification signboard shall be provided in accordance with attached drawing. An image of indicating appearance of required signboard is provided in this specification section. The signboard shall be provided at a conspicuous location on the job site, city easement or right-of-way where directed by the City Engineer.

a. The field of the sign shall consist of a 4 by 8 foot sheet of grade B-B medium density overlaid exterior plywood.

b. Lumber shall be B or better Southern pine, pressure preservative treated in accordance with AWPA C1 and AWPA C2. Nails shall be aluminum or galvanized steel. The sign should be mounted using rectangular-timber signposts, No. 2 SYP or equivalent, 4x4 or 4x6. If 4x6 post is used, 1-1/2 inch weakening holes shall be drilled through the wide face at 4 and 18 inches above the ground. The wide face of the post shall be installed parallel with traffic. No more than 2 posts shall be mounted within a 7-foot span. The post shall be embedded into the ground a minimum of 36 inches. This support may be used in both weak and strong soils. The post may be directly embedded or may be embedded in premixed concrete, soilcrete, or approve expanding closed-cell polyurethane foam. (TxDOT Complaint Work Zone Traffic Control Devices J.2.b)

c. The entire signboard and supports shall be given one coat of exterior alkyd primer and two coats of exterior alkyd enamel paint. The lettering and sign work shall be performed by a skilled sign painter using paint known in the trade as bulletin colors. The colors, lettering sizes, and lettering styles shall be indicated by the City Engineer. Where preservative-treated lumber is required, utilize only cured pressure-treated wood which has had the chemicals leached from the surface of the wood prior to painting.

d. Use spray applied automotive quality high gloss acrylic enamel paint as background for the City of Bryan logo. The City of Bryan logo shall be an applied 2 millimeter film sticker/decal with background as indicated on image provided in this specification section. The weather resistant sticker/decal film shall be rated for a minimum of 2-year exterior vertical exposure. The self-adhering sticker shall be mounted to the sign with pressure sensitive, permanent acrylic adhesive.

e. Sign paint colors (manufacturer's numbers/types listed below for color identification only)

1) Blue = Pantone 661C
2) White = Bright White
3) Red = Pantone 485C

f. City of Bryan logo must retain proportions and design integrity. City of Bryan logos in electronic format may be obtained from the City of Bryan.

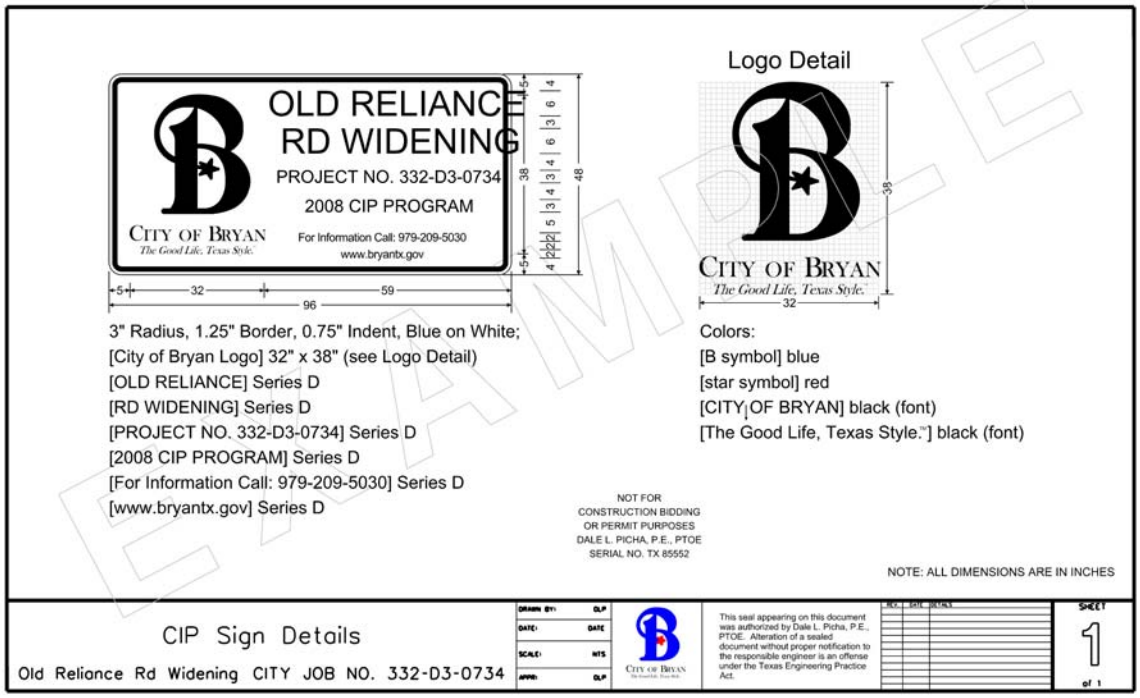

Example of Prescribed Image for CIP Project Identification Signs

SECTION 01 71 13

MOBILIZATION

PART 1 - GENERAL

1.1 DESCRIPTION:

A. This item shall govern for the establishment of office and other facilities at the project site and the movement of personnel, construction equipment and supplies to the project site or to the vicinity of the project site in order to enable the Contractor to begin work on the other contract items that will be performed by the Contractor. The cost of the payment bond and performance bond on projects that cannot begin because of a closed construction season or for the convenience of the City will be considered part of the mobilization item under this contract.

1.2 MEASUREMENT AND PAYMENT

A. This Item will be measured by the "Lump Sum", as the work progresses.

B. Partial payments of the "Lump Sum" bid for mobilization will be as follows. The adjusted contract amount for construction items as used below is defined as the total contract amount less the lump sum bid for Mobilization.

1. Upon presentation of a paid invoice for the payment bond, performance bond and/or required insurance, the Contractor will be paid that cost from the amount bid for mobilization.
2. When 1% of the adjusted contract amount for construction items is earned, 50% of the mobilization lump sum bid or 5% of the total contract amount, whichever is less, will be paid. Previous payments under this Item will be deducted from this amount.
3. When 5% of the adjusted contract amount for construction items is earned, 75% of the mobilization lump sum bid or 10% of the total contract amount, whichever is less, will be paid. Previous payments under this Item will be deducted from this amount.
4. When 10% of the adjusted contract amount for construction items is earned, 90% of the mobilization lump sum bid or 10% of the total contract amount, whichever is less, will be paid. Previous payments under this Item will be deducted from this amount.
5. Payment for the remainder of the lump sum bid for "Mobilization" will be made on the next monthly estimate cycle after the retainage estimate.

PART 2 – PRODUCTS

N/A

PART 3 – EXECUTION

N/A

END OF SECTION

SECTION 01 71 23

CONSTRUCTION SURVEYING

PART 1 - GENERAL

1.1 DESCRIPTION

This item shall govern the performance of construction staking including all labor, materials, submittals, tools and equipment necessary to perform all construction layout, control and reference staking for satisfactory completion of the project.

1.2 SURVEY REFERENCE POINTS

A. Known basic horizontal and vertical control points for the Project are indicated.
B. Locate and protect survey control points prior to starting site work, and preserve all permanent reference points during construction.
C. Notify ENGINEER in writing within 24-hours of any survey work changes or clarifications required for Project. Secure written authorization prior to making any changes or relocations.
D. Report in writing when any reference point is lost or destroyed, or requires relocation because of necessary changes in grades or locations.
E. Replace construction stakes damaged or destroyed by CONTRACTOR at no additional cost to OWNER.

1.3 MEASUREMENT AND PAYMENT

Measurement and payment for this item shall be based on a lump sum for construction staking completed in accordance with these specifications and shall include all labor, materials, testing, submittals, tools and equipment necessary to complete the work as specified. Partial payments will be made for this item based on the percentage completed of the overall work, as determined by the Engineer.

---OR---

All costs associated with surveying shall be subsidiary to the various bid items.

1.4 SUBMITTALS

A. Prior to contract closeout submit:

1. Documentation to verify accuracy of survey work.
2. When required by Laws and Regulations, submit a certificate signed by a licensed professional certifying that elevations and locations of improvements conform with the Contract Documents.
3. All survey data, survey information showing dimensions, location angles and elevations of construction are shown on contract record documents.

PART 2 - PRODUCTS

Hubs shall be 1-1/2 inch x 1-1/2 inch x 16 inch oak and witness stakes shall be 1 inch x 1 inch x 36 inch oak or other hardwood.

---OR---

N/A

PART 3 - EXECUTION

3.1 PROJECT SURVEY REQUIREMENTS

A. Any work done without line and grade established by CONTRACTOR is at CONTRACTOR's own risk.

B. Hubs with tacks shall be used for all control points, centerline or baseline offsets and structure stakeout and shall be accompanied by witness stakes marked with the pertinent information. For supplemental stakeout only, witness stakes alone may be used. For laser grade control and the verification of the laser elevation a hub with witness shall be provided.

C. All staking shall be performed under the direct supervision of a Registered Public Land Surveyor licensed by the State of Texas.

D. The surveyor shall submit certified cut sheets to the City Engineer within twenty (24) hours of performing staking. All stakes shall be set on an offset that will be clear of the excavation of the intended facility. All cut sheets shall identify benchmarks used, benchmark elevations, actual hub elevations, proposed elevations and cuts or fills for all entries. The Contractor and Project Representative for the City shall have cut sheets in hand prior to construction.

E. If impacted during construction activities, each removed marker shall be re-established by the Contractor’s surveyor.

F. Minimum staking requirements are as follows:

a. Rough Grade Stakes for Lot Grading – Provide stakes at all corners.

b. Sanitary Sewer Lines

i. Line and grade stakes shall be set every 25’ for the first 100’ out of the downstream manhole, and every 100’ thereafter to the next manhole. Stakes shall be set on centerline stationing.

ii. A line reference stake shall be set for each manhole location.

iii. Wye locations, stationed from the downstream manhole, shall be staked and the stationing shown on the cut sheets.

iv. Proposed elevations of service inverts at 15’ past the right-of-way line or end of service shall be staked and shown on the cut sheets.

v. Proposed structure top elevation and upstream and downstream invert elevations shall be shown on the cut sheets (manhole castings shall be set 0.05’ below finished street grade).

c. Water Mains

i. Line and grade stakes shall be set every 100’ on centerline stationing.

ii. Fitting locations shall be staked and the stationing shown on the cut sheets.

iii. Line and grade stakes shall be set for all hydrants (normally, the top of the operating nut shall be set 18”-24” above the top of curb). A line reference stake shall be set for each hydrant location.

iv. Proposed elevations of the tops of curb boxes shall be staked and shown on the cut sheets. Line reference stakes shall be set for curb box locations.

d. Storm Sewer

i. Line and grade stakes shall be set every 25’ for the first 100’ out of the downstream manhole, and every 100’ thereafter to the next manhole or catch basin.

ii. An offset hub and line reference stake to back of curb shall be set for all catch basins and catch basin manholes.

iii. Catch basin top, invert elevations, manhole top elevation and upstream & downstream invert elevations shall be shown on the cut sheets.

iv. Line and grade shall be set every 25’ from the downstream structure for all drain tile.

v. Wye locations, cleanouts stationed from downstream structure shall be staked.

vi. An offset hub and line reference stake to end of drain tile service stub.

e. Streets

i. Set stakes to roadway centerline and edge of pavement at 50’ intervals, all grade breaks, and at ¼ points on vertical curves for roadway subgrade.

ii. When centerline stakes are set for grading subgrade, cut sheets shall be provided (unless blue tops are set).

iii. Set stakes at finish rock grade at 50’ intervals on center of the roadway. For roadways with a raised median island, stakes are required for the roadway on each side of the median.

iv. Line and grade stakes shall be set every 25’ and for all begin, mid and end rad points at all street intersections.

v. Set stakes at 25’ intervals, at BC and EC for all curvilinear alignment and at midpoint of curb returns.

vi. Cut sheets shall be provided for all curb and gutter construction.

f. Retaining/Sound Walls

i. Set stakes at 50’ intervals on centerline stationing. At all top and bottom of steps in the footing and wall.

END OF SECTION

SECTION 02 41 13.13

REMOVAL OF EXISTING CONCRETE

PART 1 - GENERAL

1.1 DESCRIPTION

A. This item shall consist of breaking up, removing and satisfactorily disposing of existing pavement along the right-of-way or at locations shown on the Plans.

1.2 MEASUREMENT AND PAYMENT

A. Existing pavement, concrete sidewalk and driveways, removed as prescribed above will be measured by the square yard in its original position, regardless of its thickness or the depth of covering.

B. Existing combined concrete curb and gutter and concrete curb, removed as prescribed above, will be measured by the linear foot in its original position, regardless of its thickness or the dimensions of same.

C. The work performed as prescribed by this item and measured as provided under "Measurement", will be paid for at the unit price bid for "Removal of Existing Concrete" (of the type specified), which price shall be full compensation for breaking up of the concrete, loading, hauling, unloading and satisfactorily storing or disposing of the material. Payment shall include all labor, tools and equipment to complete the work. Payment will not be made for unauthorized work.

PART 2 – PRODUCTS

N/A

PART 3 – EXECUTION

3.1 CONSTRUCTION METHODS

A. Existing pavement (with or without bituminous top), sidewalk, driveway, curb, or combined curb and gutter shall be broken up into pieces not greater than eighteen (18) inches in any dimension by air-driven machinery or other suitable means. The use of explosives will not be permitted.

B. Where only a portion of the existing concrete is to be removed, special care shall be exercised to avoid damage to that portion of the concrete to remain in place. The existing concrete shall be cut to the neat lines shown on the Plans or established by the Engineer. Any existing concrete beyond the neat lines so established which is damaged or destroyed by these operations shall be replaced at the Contractor's expense.

C. Existing pavement, which is to be removed, shall be loaded, hauled and neatly stored at designated sites, or otherwise disposed of as directed by the Engineer. Work performed under this item shall be inaugurated at such times and prosecuted in such manner as to cause minimum inconvenience to traffic or to the owners of adjacent property.

END OF SECTION

SECTION 03 30 00

CONCRETE

(Sentences and/or paragraphs that are double underlined indicate revisions that were made from the 2009 specification.)

PART 1 - GENERAL

1.1 DESCRIPTION

A. This specification shall govern for Portland cement concrete to be used in concrete pavement, concrete structures and other concrete construction. All concrete shall be from a NRMCA certified plant.

1.2 MEASUREMENT AND PAYMENT

A. In general and unless otherwise specified, no separate payment will be made for concrete as an item. The cost of concrete including all materials and equipment, furnishing and placing all reinforcing steel, and performing all labor for the manufacturing, transporting, placing, finishing, and curing of concrete will be included in the unit price bid for specific items as set forth in the Proposal. Payment will not be made for unauthorized work.

1.3 SUBMITTALS

List of Admixtures proposed
Concrete Mix Designs and three sets of tests on the mix designs submitted.
Certification for cement conformance to specification
Test reports for all required concrete tests
Mill report/Certifications for all Reinforcing Bar.
Material Data on Control, Expansion and Contraction Joint materials and sealants.
Provide a current NRMCA plant certification

PART 2 – PRODUCTS

2.1 MATERIALS

A. PORTLAND CEMENT:

Cement shall be Type I, II or III Portland Cement conforming to ASTM C150, or Type IA, IIA or IIIA, conforming to ASTM C175 except as noted below.

1. Different types of cement, as prescribed above may be used in the same structure, but all cement used in any one monolithic placement shall be of the same type and brand.
2. Type III cement shall not be used when the anticipated air temperature for the succeeding 12 hours will exceed 60° F.

B. FLY ASH:

Fly Ash shall be Type C or F Fly Ash in accordance with ASTM C618. When fly ash is used, “cement” shall be defined as “cement plus fly ash”. “Cement plus fly ash” shall be composed of Type I, II or III Portland cement up to 25 percent fly ash by weight of cementitious materials.

C. AGGREGATE:

1. Concrete aggregate shall conform to all requirements of Texas Department of Transportation Standard Specifications for Construction and Maintenance of Highways, Streets, and Bridges (2004) Section 421.2 E 1, 2 and 3, and ASTM C33.

2. The maximum size of aggregate shall not be larger than one-fifth of the narrowest dimension between forms of the member for which concrete is to be used nor larger than three-fourths of the minimum clear spacing between reinforcing bars.

D. WATER:

Water for use in concrete and for curing shall be from municipal supplies approved by the Texas Commission on Environmental Quality and Texas Department of Health or shall have a maximum concentration of 50,000 ppm of total suspended solids according to AASHTO T26 for quality of water and conform to ASTM 1602 - Standard Specification for Mixing Water Used in the Production of Hydraulic Cement Concrete.

E. REINFORCING STEEL:

1. The reinforcing steel shall be Grade 60.

2. Steel reinforcing bars as required, shall be of the type and size as shown on Plans and shall be open hearth new billet steel of structural, intermediate, or hard grade, or shall be rail steel concrete reinforcement bars. All steel shall be bent cold.

3. New billet steel shall conform to the requirements of the Standard Specifications for Billet-Steel Concrete Reinforcement Bars, ASTM Designation A-15.

4. When fabricated steel bar or rod mats are specified, the mats shall meet the current requirements of specifications for Fabricated Steel Bar or Rod Mats for Concrete Reinforcement ASTM Designation A-184.

5. In the event reinforcing bars manufactured outside of the Continental United States or its territories are used, two sets of tests from an independent testing laboratory acceptable to the Engineer shall be submitted showing that the steel meets the ASTM Standards for tensile strength, phosphorus content, bend, deformations and such other requirements outlined in the ASTM Standards for the grade used. These tests shall be made by and independent testing laboratory at the Contractor's expense and shall be submitted for each 25 tons of steel supplied from each individual mill.

6. At the time of placement in the concrete, reinforcing steel shall be free of dirt, loose rust, mill scale, paint, grease, oil or other deleterious materials that would impair the bonding of the concrete to the steel.

7. Reinforcement shall be accurately positioned and, unless otherwise shown or specified, shall be secured against displacement by using at intersection, annealed iron wire of not less than No. 18 gauge or suitable metal clips. It shall be supported by plastic or metal chairs or spacers. In general, reinforcement shall be placed, spliced, lapped, located, etc., in accordance with the recommendations of the Concrete Reinforcement Steel Institute or Texas Department of Transportation Standard Specifications for Construction and Maintenance of Highways, Streets, and Bridges (2004) Section 440.

8. Under no circumstances shall reinforcing steel or dowel bars be "stabbed" into fresh concrete. When reinforcing steel or dowel bars are required to extend beyond the slip-formed surface, holes shall be drilled and the steel shall be epoxyed into place using a pre-approved epoxy.

F. STORAGE OF MATERIALS:

1. All cement, fly ash and mineral filler shall be stored in well-ventilated weatherproof buildings or pre-approved bins, which will protect them from dampness or absorption of moisture.

2. The method of handling and storing concrete aggregates shall prevent contamination with foreign materials. To assure uniform concrete, aggregate stockpiles shall be maintained at reasonably uniform moisture content.

2.2 TESTING REQUIREMENTS

A. CONCRETE QUALITY AND ALLOWABLE STRESSES

1. Concrete Quality:

Concrete mixes will be designed and made in sufficient number to represent the required water-cement ratios. These mixes shall comply with the requirements prescribed for strength and consistency as shown below. The Contractor shall furnish the results on trial mixes from a testing laboratory pre-approved by the Engineer.

Minimum Compressive Strength, psi at 28 days	Minimum Cement Content Sack/cubic yard	Maximum Water Content Gal/sack of cement	General Usage
1,500	3.0	11.0	Riprap
3,000	4.5	6.0	Drilled Pier, Inlets; Manholes; Headwalls; Sidewalks; Driveways;
3,500	5.0	6.0	Concrete Pavement; curb and gutters
4,000	5.5	5.0	Bridge slab; Culverts

The slump of concrete mixtures shall be within the following limits when measured according to "Test for Slump of Portland Cement Concrete" (ASTM C142). When admixtures are used to increase the workability, the mix design shall indicate the slump before and after its introduction into the mix.

TYPE OF CONSTRUCTION	COMPRESSIVE STRENGTH OF CONCRETE, psi	MAXIMUM SLUMP (before admixtures)
Concrete Pavement	3,500	3”
Curb and Gutter	3,500	3”
Sidewalk	3,000	5”
Drilled Piers	3,000	7”
Thin Walled Sections (9” or less)	3,000	5”
Thick Walls	By Special Design	

B. TESTS ON CONCRETE

1. During the progress of the work, compression test specimens shall be made and cured in accordance with "Standard Method of Making and Curing Concrete Compression and Flexure Test Specimens in the Field" (ASTM C31). Not less than three specimens shall be made for each test, nor less than one test for each 50 cubic yards or fraction thereof of concrete placed or for each day’s pour. These tests shall be made by an independent testing laboratory at the Owner's expense.
2. Specimens shall be tested in accordance with "Standard Method of Test for Compressive Strength of Molded Concrete Cylinders" (ASTM C39).
3. The standard age of test shall be 7 days and 28 days.
4. If the average strength of the control cylinders for any portion of the structure falls below the specified compressive strength, the Engineer shall have the right to order changes in the proportions or the cement content for the remaining portion of the structure. If the concrete minimum 28 day strength is not achieved the Engineer shall have the right to order its removal.
5. An air-entraining admixture may be used with Type I, II, or III Portland Cement in lieu of an Air-Entraining Portland Cement. The admixture shall meet the requirements of "Specifications for Air-Entraining Admixtures for Concrete" (ASTM C260). Concrete produced from either Type IA, IIA, or IIIA cement or the use of air-entraining admixtures shall have an air content from 3 to 5 percent when determined by means of the test for air-content, ASTM C231.

C. TEST CYLINDERS

Preparation of test cylinders and tests on concrete cylinders shall be made at the expense of the Owner. The cost of all failed tests shall be charged to the Contractor.

PART 3 – EXECUTION

3.1 CONSTRUCTION METHODS

A. PREPARATION OF EQUIPMENT AND PLACE OF DEPOSIT:

1. Before placing concrete, all equipment for mixing and transporting the concrete shall be cleaned. All debris shall be removed from the place to be occupied by the concrete.
2. Water shall be removed from place of deposit before concrete is placed unless otherwise permitted by the Engineer.

B. MIXING OF CONCRETE

1. The concrete shall be mixed until there is a uniform distribution of materials and shall be discharged completely, before the mixer is recharged.
2. For job-mixed concrete, the mixer shall be rotated at a speed recommended by the manufacturer. Mixing shall be continued at least one (1) minute after all materials are in the mixer. Job-mixed concrete shall be rejected and disposed of as directed if not placed as prescribed within thirty (30) minutes after beginning of mixing. Job-mixed concrete is only allowed with written approval from the City Engineer 72-hours prior to the pour.
3. Ready-mixed concrete shall be measured, mixed and delivered in accordance with the requirements set forth in "Standard Specifications for Ready-Mixed Concrete" (ASTM C-94).

C. CONVEYING

1. Concrete shall be conveyed from the mixer to the place of final deposit by methods which will prevent the separation or loss of the materials.
2. Equipment for chuting, pumping, and pneumatically conveying concrete shall be of a size and design to insure a continuous flow of the concrete at the delivery point, without separation of the materials.

D. TRANSPORTATION EQUIPMENT

Transportation of concrete mixed completely in a stationary mixer, from the mixer to the point of placement, shall be by truck agitator, or in a truck mixer operating at agitator speed, or in non-agitating equipment conforming to ASTM Standard C-94 except as modified herein. Truck agitators, truck mixers, and non-agitating equipment shall be capable of delivering concrete without segregation in transit. Slump tests of individual samples taken at approximately the one-quarter and three-quarter points of the load during discharge shall not vary by more than 1 inch. Vehicles transporting concrete mixed partially or completely in stationary mixers shall be equipped with discharge chutes or other devices when operating outside of the prepared subgrade, or shall be supplemented by additional transfer equipment capable of discharging or transferring the concrete from the transporting vehicle to its final position in the form without segregation.

E. FACILITIES FOR SAMPLING

Suitable facilities shall be provided for readily obtaining representative samples of aggregate from each of the bins or compartments for test purposes. Suitable facilities shall be provided for obtaining representative samples of concrete for uniformity tests. All necessary platforms, tools, and equipment for obtaining samples shall be furnished by the Contractor.

F. PLACING CONCRETE

1. The Contractor shall give the Engineer a minimum 24 hours advance notice before placing concrete to permit the inspection of forms, reinforcing steel placement and other preparations.

2. Concrete placement will not be permitted when impending weather conditions would impair the quality of the finished work.

3. Transporting Time: The maximum time interval between the addition of cement to the batch and the placing of concrete in the forms shall conform to the requirements below:

Concrete Temp (at point of placement)	Max Time (No Retarding Agent Minutes)	Max Time (with Retarding Agent) Minutes
Non-Agitated Concrete		
Above 80 F	15	30
80 F and Below	30	45
Agitated Concrete		
Above 90 F	45	75
Above 75 F thru 90 F	60	90
75 F and Below	90	120

4. All forms, sub grade and steel shall be dampened before placement of concrete to assist with retaining moisture in the concrete.

5. Cold Weather Precautions:

Concrete shall not be placed when the ambient temperature is below 40° F and falling. Concrete may be placed when the ambient temperature is above 35° F and rising, the ambient temperature being taken in the shade and away from artificial heat. Concrete shall not be placed when the forecast predicts 72 continuous hours of temperatures less than 32° F.

The Contractor shall have available a sufficient supply of pre-approved cotton mats, polyethylene sheeting or other pre-approved covering materials to immediately protect concrete if the air temperature falls to 32° F, or below, before concrete has been in place for less than four (4) hours. Such protection shall remain in place during the period the temperature continues below 32° F, or for a period of not more than five (5) days. Neither salt nor other chemical admixtures shall be added to the concrete to prevent freezing. The Contractor shall be responsible for the quality and strength of concrete under cold weather conditions and any concrete damaged by freezing shall be removed and replaced at the Contractor's expense.

The surface of all concrete in bents, piers, culvert walls, retaining walls, bottom of slabs, and similar formed concrete shall be maintained at 40° F or above for a period of 72 hours from the time of placements. The temperature of all concrete, including the bottom slabs (footings) of culverts placed on or in the ground, shall be maintained above 32° F for a period of 72 hours from time of placement.

Protection shall consist of providing additional covering, insulated forms or other means, and if necessary, supplementing such coverings with artificial heating.

6. Warm Weather Precautions

   The following precautions shall be taken in placing, curing, and protecting the concrete when local weather records show that the maximum daily temperature is likely to exceed 95° F. The forms and the subgrade, subbase or base course shall be sprinkled with water immediately before placing the concrete. The concrete shall be placed at the coolest temperature practicable, and in no case shall the temperature of the concrete exceed 95° F when deposited on the subgrade, subbase or base course. The temperature of the concrete shall not exceed 85° F for bridge slabs or in the top slab of direct-traffic culverts. The aggregates and/or mixing water will be cooled as necessary to maintain the concrete temperature within the specified maximum. Concrete shall be placed in the forms continuously and rapidly at a rate of not less than 100 feet of paving lane per hour. The surface of the newly laid pavement shall be kept damp by means of a water fog or mist applied with pre-approved spraying equipment until the pavement is covered by the pre-approved curing medium.

7. Concrete shall be deposited as nearly as practicable in its final position to avoid segregation due to rehandling or flowing. The deposition shall be at a rate that allows the concrete to be plastic at all times and permits flow readily into the space between the rebar. Retempered concrete shall not be used and concrete shall not have a free fall of more than five (5) feet, except in the case of thin walls such as in culverts or as specified in other items. Any hardened concrete spatter ahead of the plastic concrete shall be removed.

8. Concrete deposition shall be a continuous operation until completed at the panel or section. Cold joints in a monolithic placement shall be avoided. The sequence of successive layers or adjacent portions of concrete shall be such that they can be vibrated into a homogeneous mass with the previously placed concrete. Not more than one (1) hour shall elapse between adjacent or successive placements of concrete.

9. Concrete shall be <u>thoroughly</u> consolidated and vibrated in the forms with pre-approved mechanical vibrators of a type considered in the design of forms.

G. <u>FINISHING</u>

Unless noted otherwise, apply an ordinary surface finish as the final finish to the following exposed surfaces:

- inside and top of inlets,
- inside and top of manholes,
- inside of sewer appurtenances,
- inside of culvert barrels, bottom of bridge slabs between girders and beams, and
- vertical and bottom surfaces of interior concrete beams or girders.

An ordinary surface finish shall be as follows:

- Chip away all loose or broken material to sound concrete where porous, spalled, or honeycombed areas are visible after form removal.
- Repair spalls by saw-cutting and chipping at least 1/2 in. deep, perpendicular to the surface to eliminate feather edges. Repair shallow cavities using a latex adhesive grout, cement mortar, or epoxy mortar as pre-approved. Repair large areas using concrete as directed or pre-approved.
- Clean and fill holes or spalls caused by the removal of form ties, etc., with latex grout, cement grout, or epoxy grout as pre-approved. Fill only the holes. Do not blend the

patch with the surrounding concrete. On surfaces to receive a rub finish in accordance with Item 427, "Surface Finishes for Concrete," chip out exposed parts of metals chairs to a depth of 1/2 in. and repair the surface.

- Remove all fins, runs, drips, or mortar from surfaces that will be exposed. Smooth all form marks and chamfer edges by grinding or dry-rubbing.
- Ensure that all repairs are dense, well bonded, and properly cured. Finish exposed large repairs to blend with the surrounding concrete where a higher class of finish is not specified.

Finish of Bridge Slabs and related features shall be in compliance with TxDOT Standard Specifications for Construction and Maintenance of Highways, Streets, and Bridges (2004) Section 420.4.

F. CURING

The concrete shall be kept wet by spraying with water after attaining its final set and before removing the forms. Bottom forms supporting floor or roof slabs shall remain in place for not less than seven (7) days. The concrete shall have attained a compressive strength of not less than 2,000 psi prior to removal of bottom forms. All other forms may be removed twenty-four hours after completion of concrete placement, providing the weather has allowed the concrete to attain its final set in less than five (5) hours. The forms shall be left on for forty-eight (48) hours whenever the temperature of the air in the shade during pouring is 90° F or over. Curing shall be continued for five days after placement of concrete. This may be done with wet mats, with two applications of Type I (White in color) Liquid-Membrane-Forming Compound meeting requirements of ASTM C309, or with waterproof curing paper meeting the requirements of ASTM C171.

G. CONSTRUCTION JOINTS

Construction joints will be made only at locations shown on the Plans unless written permission is granted by the Engineer to make additional joints. Unless otherwise required, make construction joints square and normal to the forms. Use bulkheads in the forms for all vertical joints. Thoroughly roughen the top surface of a concrete placement terminating at a horizontal construction joint as soon as practical after initial set is attained. Thoroughly clean the hardened concrete surface of all loose material, laitance, dirt, and foreign matter. The surface is to be dampened just prior to casting of concrete against the joint.

END OF SECTION

SECTION 03 30 01

CONCRETE BLOCKING OR ANCHORAGE

PART 1 - GENERAL

1.1 DESCRIPTION

A. This section covers the manufacture of materials and installation of concrete blocking or anchorage for thrust resistance. Concrete blocking shall be placed at bends, tees, crosses, fire hydrants, plugs, etc. in the supply line. Blocking shall also be installed for blow-offs as shown on the plans or as directed by the Engineer.

1.2 MEASUREMENT AND PAYMENT

A. Restrained joints, fittings, and concrete blocking shall not be a separate bid item. Cost for work herein specified, including the furnishing of all materials, equipment, labor, and incidentals necessary to complete the work, shall be included in the unit price for water or sanitary sewer lines in place.

PART 2 – PRODUCTS

2.1 MATERIALS

A. Cement shall conform to the current ASTM C150 standard and be Type I.

B. Aggregates shall conform to the current ASTM C33 standard.

C. Concrete strength shall be at least 2,000 psi at twenty-eight (28) days, unless otherwise shown on the plans. Concrete for blocking shall be of a quality and placed in accordance with SECTION 03 30 00 – CONCRETE. The concrete for blocking shall be class 2,000 psi concrete (class "C").

D. 3,000 psi sack-crete may be used but must be hydrated prior to placement.

PART 3 – EXECUTION

3.1 CONSTRUCTION METHODS

A. THRUST RESTRAINT

1. Hydrants

The bowl of each hydrant shall be well braced against a sufficient area of unexcavated earth at the end of the trench with concrete blocking, or it shall be tied to the pipe with restrained joints as shown or directed by the City.

Tie rods, clamps, or other components of dissimilar metal shall be protected against corrosion by encasement of the entire assembly with 8-mil thick, loose polyethylene film in accordance with AWWA C105.

Thrust restraint design pressure should be equal to 200 psi.

2. Fittings

The contractor shall install concrete blocking **and** retaining glands to all tees, Y-branches, bends deflecting eleven and one-fourth degrees (11 ¼°) or more, and plugs which are subject to internal pressure in excess of 10 psi. to preclude separation of joints.

If stainless steel is not used, the contractor shall protect from corrosion all steel clamps, rods, and other metal accessories used in reaction anchorages, or joint harnesses subject to submergence, or in direct contact with earth and not encased in concrete with epoxy coating or wrapped with 8 mil. polyethylene film. All bolts and nuts shall be 316 Stainless Steel.

3. Restraint Materials

Vertical and horizontal reaction blocking shall be made of concrete having a compressive strength of not less than 2,000 psi after twenty-eight (28) days.

Blocking shall be placed between solid ground and the fitting to be anchored; the area of bearing in the pipe and on the ground in each instance shall be that shown on the plans or directed by the City. The blocking shall, unless otherwise shown or directed, be so located as to contain the resultant thrust force, and so that the pipe and fitting joints will be accessible for repair.

Mechanical joints utilizing set-screw retainer glands (DIP only, use Megalug or pre-approved equal for PVC), or metal harness of tie rods or clamps shall be used **in addition to** concrete blocking. Components of dissimilar metal shall be protected against corrosion by encasement of the entire assembly with 8-mil thick, loose polyethylene film in accordance with AWWA C105.

B. PLACING CONCRETE BLOCKING

Extend 2,000 psi concrete blocking from the fitting to solid, undisturbed earth and install so that all joints are accessible for repair. The bearing area shall be as shown on the plans. If no details regarding blocking are shown on the plans, provide enough concrete bearing against the ditch to limit soil loading to 200 psf from the thrust produced at an internal pressure in the pipe of 200 psi.

Concrete shall not be placed unless all pipes, valves, fittings, forms, and reinforcement have been inspected.

Handle all concrete in such a manner to avoid segregation, separation, or loss of ingredient, or the displacement of piping, etc.

Place concrete in continuous horizontal layers not exceeding 24". Place each layer quickly enough so that the previously placed concrete is still plastic when the next layer is placed. Provide any construction joints that are necessary.

Before beginning the placement of concrete, inspect all forms, pipes, fittings, valves, etc. for alignment and rigidity. Tighten all supports and make corrections to alignment as required. Inspect all reinforcement, if any, for placement and rigidity.

Do not begin placing concrete until all forms and reinforcement have been inspected by the Engineer.

Clean all loose dirt, mud, water, and debris from the trench and forms. All surface encrusted with hardened concrete form previous placement operations shall be clean.

Clean all pipe, fittings, valves, etc. projecting from previously placed concrete before placing new concrete.

Accurately and securely place all embedded items.

END OF SECTION

SECTION 03 34 00

FLOWABLE FILL EXISTING LINE

(Sentences and/or paragraphs that are double underlined indicate revisions that were made from the 2009 specification.)

PART 1 - GENERAL

1.1 DESCRIPTION

A. This item shall govern the flowable mortar filling of existing lines where specified and/or shown on the Plans. All work shall conform to this specification

1.2 MEASUREMENT AND PAYMENT

A. Where "Flowable Fill Existing Line" is measured for payment the unit of measurement will be linear feet of line grouted, complete and in place. Payment shall be at the unit price bid in the Proposal. Unless otherwise specified or directed, flowable mortar will not be measured as pay quantities but will be included in the unit price bid for the specific item or items into which they are incorporated as set forth in the bid Proposal. The price for this item shall be full compensation for furnishing all equipment, labor, materials, tools and incidentals necessary to complete the work.

1.3 SUBMITTALS

A. Mix Design

B. Work Plan

PART 2 – PRODUCTS

2.1 MATERIALS

A. Materials shall conform to SECTION 04 05 12 - MORTAR AND GROUT

PART 3 – EXECUTION

3.1 CONSTRUCTION METHODS

A. EXECUTION

Prior to filling the line with flowable fill material, the Contractor shall verify that no live services remain connected to the line. Services found during this procedure shall be paid for using the "Sanitary Sewer Service" item. All live services shall be reconnected to an adjoining main line.

"Flowable Fill Existing Line" shall require that an existing underground conduit (pipe, waterline, sewer line, storm drain line, etc.) be completely filled with a low strength flowable mortar. In order to achieve this, the flowable mortar to be pumped into the line shall have a consistency that will permit forced flow into the entire length of line. Blocking the line by intermediate excavation and gravity flow concrete or grout is NOT acceptable. The existing

line to be filled with flowable mortar shall be exposed and plugged with concrete bulkheads at both ends. In some cases this will require the excavation of the existing line and that the pipe be broken open. 3" Schedule 40 PVC shall extend through the bulkhead and using a 90 degree elbow extend up to the surface on both ends of the line to be grouted. The flowable mortar shall be pumped through the 3" PVC until the flowable mortar is visible at the other end of the conduit through the 3" PVC. No more than 15 psi shall be used to pump the flowable mortar mixture, and care should be used to avoid filling adjoining voids with the flowable fill material.

B. ALTERNATE EXECUTION

At the option of the Contractor, the existing line may be removed from the ground and disposed of properly. Hazardous materials removed from the ground shall require a receipt from a site certified to accept hazardous material. When this option is used, the surface must be restored to existing or better condition per the drawing details for trench embedment. Restoration of the trench and surface is subsidiary to the price of "Flowable Fill Existing Line."

C. COMPOSITION

The proportions by volume or weight of cement, fine aggregate and water shall produce a plastic mixture. The degree of workability shall be consistent with the use to which the mixture is placed, and shall be pre-approved by the Engineer. The mix shall contain no course or medium aggregates and shall contain at least two sacks of cement per cubic yard of grout.

D. EQUIPMENT

All equipment, tools and machinery used in handling and mixing flowable mortar shall meet the approval of the Engineer. Flowable mortar shall be machine mixed in a batch type mixer.

E. REJECTION

"Flowable Fill Existing Line" may be rejected for failure to meet any of the requirements of the Specifications, and specifically for:

1. Failure to successfully pump flowable mortar to the other end of the line.
2. Flowable mortar attaining initial set before use.
3. Improper mixing.

If the flowable mortar is rejected because of "A", all line not filled shall be removed from the ground and the trench repaired per the drawing details for trench embedment at the Contractor's expense.

END OF SECTION

SECTION 04 05 12

MORTAR AND GROUT

PART 1 - GENERAL

1.1 DESCRIPTION

A. Mortar and grout where specified and/or shown on the Plans shall conform to this section of the Specifications. Mortar and grout shall be designated by type as set forth. The uses and purposes of said types shall be consistent with the uses and purposes as designated. For grout filling existing lines please refer to SECTION 03 34 00 – GROUT FILL EXISTING LINE.

1.2 MEASUREMENT AND PAYMENT

A. Where mortar and/or grout are measured for payment the unit of measurement will be cubic yards of mortar and/or grout, complete and in place. Payment shall be at the unit price bid in the Proposal. However, unless otherwise specified or directed, mortar and/or grout will not be measured as pay quantities but will be included in the unit price bid for the specific item or items into which they are incorporated as set forth in the bid proposal.

1.3 SUBMITTALS

A. Mix Design

PART 2 – PRODUCTS

2.1 MATERIALS

A. MASONRY MORTAR shall be composed of fine aggregate thoroughly mixed with cement and water. The mixture produced shall be homogeneous with a consistency required for ease of handling and spreading by a trowel.

B. STANDARD GROUT shall have a consistency that will permit flow into the joints, completely filling them.

C. PIPE JOINT MORTAR shall have consistency and workability for use as dictated by accepted practices and/or as required for specific job conditions.

D. NEAT CEMENT GROUT shall be composed of Portland Cement and water mixed to the consistency required for specific job conditions.

2.2 TESTING REQUIRMENTS

Mortar and grout may be rejected for failure to meet any of the requirements of the Specifications, and specifically for:

A. Retempered mortar and/or grout.

B. Mortar and grout attaining initial set before use.

C. Improper mixing.

D. Mortar and grout containing frozen aggregates.

E. Mortar and grout subjected to freezing within three (3) days after being placed in the work.

PART 3 – EXECUTION

3.1 CONSTRUCTION METHODS

The proportions by volume or weight of cement, fine aggregate and water shall produce a plastic mixture. The degree of workability shall be consistent with the use to which the mixture is placed, and shall be pre-approved by the Engineer.

A. CEMENT: Cement used in mortar and grout shall be Type I or Type III Portland Cement which shall conform to the current ASTM Designation C-150.

B. FINE AGGREGATE: Fine aggregate to be used in mortar and grout shall consist of sand or a mixture of sands, with or without a mineral filler. The sand or mixture of sands in fine aggregate shall consist of clean, hard, durable, uncoated grains, free from lumps. Fine aggregate shall not contain deleterious substances in excess of the following percentages by weight:

Material removed by decantation 3.0%

Clay lumps..... 0.5%

Other deleterious substances..... 2.0%
(such as coal, shale, coated grains, and soft, flaky particles)

Fine aggregate shall be free from an excess of harmful salts or alkali. When subjected to the color test for organic impurities the sand or mixture of sands shall not show a color darker than the standard color. The fine aggregate shall be well graded from coarse to fine, and when tested by laboratory methods shall meet the following requirements for percentages by weight:

Retained on 3/8 inch screen 0%

Retained on 1/4 inch screen ..... 0 - 5%

Retained on No. 20 mesh sieve ..... 15 - 50%

Retained on No. 100 mesh sieve..... 85 - 100%

Combining two sands of different gradations may be the most economical way to meet these specifications. If this is done, each sand shall be separately and accurately measured by volume or weight in such proportions as the Engineer may direct. Sands and mineral filler shall not be mixed prior to batching. Mineral filler and the use of it shall be pre-approved by the Engineer. In no case shall the added amount of mineral filler exceed ten (10) percent of the weight of the fine aggregate. The mineral filler, when tested by laboratory methods, shall meet the following percentages by weight:

Retained on No. 20 mesh sieve 0%

Retained on No. 30 mesh sieve ..... 0 - 5%

Retained on No. 100 mesh sieve..... 0 - 30%

C. WATER: Water for use in mortar and grout shall be reasonably clean and free from injurious amounts of oil, acid, alkali, organic matter or other deleterious substances. Water suitable for drinking or ordinary household uses may be considered acceptable for use in mortar and grout.

D. EQUIPMENT

All equipment, tools and machinery used in handling and mixing mortar and grout shall meet the approval of the Engineer. Mortar and grout shall be machine mixed when the amount required justifies machine mixing. Machine mixers shall be of the batch type.

E. MIXING

Mortar and grout shall be mixed only in the quantities required for immediate use. Where machine mixing is indicated or directed, the fine aggregate along with the cement and water shall be measured separately, introduced into the mixer, and mixed for a period of time of not less than one and one-half (1 1/2) minutes. This is the time measured from the entry of the last aggregate into the drum until the discharging of mortar or grout. The required water shall be introduced into the mixing drum during the first fifteen (15) seconds of mixing. The entire contents of the drum shall be discharged before introducing any materials for the succeeding batch. Any hand mixing as pre-approved by the Engineer shall be done in a pre-approved watertight box, and the sequence of mixing operations shall be as follows:

1. The box shall first be filled with the required amount of sand; the sand shall be leveled with the required amount of cement spread uniformly on top of the sand; the materials shall then be dry mixed by turning not less than three (3) times with a mortar hoe; the required amount of water shall then be added and the hoe mixing continued until the batch is of uniform color and consistency.
2. All mortar and grout shall be used within one (1) hour after mixing or before any visible signs of setting become discernible. Retempering of mortar or grout will not be permitted.

The types, uses and proportions of mortar and grout shall be as follows:

TYPES	USES	SACKS OF CEMENT	CUBIC FEET OF FINE AGGREGATE
"A"	Masonry mortar	1	2
"B"	Standard grout	1	3
"C"	Pipe joint mortar	1	1
"D"	Neat cement grout	1	none

F. ADMIXTURES

Lime may be added to increase workability in an amount not to exceed ten (10) percent of the cement content of the masonry mortar. Admixtures for the purposes of curing, accelerating the setting, or lowering the freezing point will not be permitted.

END OF SECTION

SECTION 09 03 12

CONDUCTIVE TRACE WIRE FOR WATER PIPE AND SEWER FORCE MAIN INSTALLATION

(Sentences and/or paragraphs that are double underlined indicate revisions that were made from the 2009 specification.)

PART 1 - GENERAL

1.1 DESCRIPTION

A. Install electrically continuous trace wire with access points as described herein to be used for locating pipe with an electronic pipe locator after installation.

1.2 MEASUREMENT

A. There is no separate payment for the supply and installation of tracer wire on any construction or installation of water main and/or sewer force main by the Contractor. The Contractor shall consider the supply and installation of the tracer wire incidental to all construction of water main and/or sewer force main.

1.3 SUBMITTALS

A. Submit manufacturer's data on materials furnished that indicate compliance with the specifications regarding materials used.

B. Indicate on plans location of each trace wire test station.

PART 2 – PRODUCTS

2.1 MATERIALS

A. Trace wire to be fourteen (14) gauge minimum solid copper with thermoplastic insulation recommended for direct burial. Each trace wire access point to be composed of one Copperhead® SnakePit® Magnetized Tracer Box, Traffic Rated, Test and Monitoring Station or pre-approved equal installed in each proposed 24"x24"x6" concrete pad.

2.2 TESTING REQUIREMENTS

A. Contractor shall perform a continuity test on all trace wire in the presence of the Engineer or the Engineers' representative. If the trace wire is found to be not continuous after testing, Contractor shall repair or replace the failed segment of the wire.

PART 3 – EXECUTION

A. Trace wire shall be installed on all water mains and/or sewer force mains. The wire shall be installed in such a manner as to be able to properly trace all water mains and/or sewer force mains without loss or deterioration of signal or without the transmitted signal migrating off the tracer wire.

B. Trace wire shall be installed in the same trench and inside bored holes and casing with pipe during pipe installation. It shall be secured to the pipe as required to insure that the wire remains adjacent to the pipe.

C. Trace wire access points shall in general be no more than five-hundred (500) feet and at every proposed 24” x 24” x 6” concrete valve box collar. Concentrations of multiple proposed valves near pipe intersections, i.e. tees or crosses, may require more than one access point assembly in each concrete valve box collar. Trace wire access points shall be within public right-of-way or public utility easements.

D. Tracer wire shall be laid flat. The wire shall be protected from damage during the execution of the works. No breaks or cuts in the tracer wire or tracer wire insulation shall be permitted. At water service saddles, the tracer wire shall not be allowed to be placed between the saddle and the water main.

END OF SECTION

SECTION 31 11 00

CLEARING AND GRUBBING

PART 1 - GENERAL

1.1 DESCRIPTION

A. This section governs the furnishing of all labor, equipment, tools, and materials, and the performance of all work for clearing, grubbing, and disposal of material within the work site required for construction of a site in accordance with specification requirements.

1.2 DEFINITIONS

A. Clearing consists of cutting off trees and brush vegetative growth to not more than a specified height above ground and disposing of felled trees, previously uprooted trees and stumps, and surface debris.

B. Close-cut clearing consists of cutting off standing trees, brush, scrub, roots, stumps and embedded logs, removing at, or close to, existing grade and disposing of fallen timber and surface debris.

C. Clearing isolated trees consists of cutting off to not more than specified height above ground of designated trees, and disposing of felled trees and debris.

D. Underbrush clearing consists of removal from treed areas of undergrowth, deadwood, and trees smaller than 50 mm trunk diameter and disposing of all fallen timber and surface debris.

E. Grubbing consists of excavation and disposal of stumps and roots boulders and rock fragments of specified size to not less than a specified depth below existing ground surface.

1.3 MEASUREMENT AND PAYMENT

A. This item will be measured by the acre unless otherwise shown on the bid documents.

B. For “acre” measurement, the work performed in accordance with this item and measured as provided under “measurement” will be paid for at the unit price bid for “Clearing and Grubbing.” This price is full compensation for pruning of designated trees, and shrubs; removal and disposal of structures and obstruction; backfilling of holes: furnishing and placing concrete for plugs; and equipment, labor, tools and incidentals.

1.4 SUMBITTALS

A. Burn permits shall be submitted to the owner prior to burning of vegetation.

B. Notice of Intent (NOI) and Stormwater Pollution Prevention Plan (SWPPP) or cause for exemption.

C. Proof of legal disposal of all hazardous material shall be required when hazardous material is involved.

1.5 STORAGE AND PROTECTION

A. Prevent damage to fencing, trees, landscaping, natural features, bench marks, existing buildings, existing pavement, utility lines, site appurtenances, water courses, root systems of trees which are to remain.

B. Repair any damaged items to approval of Engineer/Architect. Replace any trees designated to remain, if damaged, as directed by Engineer /Architect.

C. When shown on the plans, treat cuts on trees with an approved tree wound dressing within 20 minutes of making a pruning cut or otherwise causing damage to the tree.

1.6 WASTE MANAGEMENT AND DISPOSAL

A. Follow all local and state regulations when burning, if burning of brush is approved, pile and burn at approved locations.

B. Testing, removal and disposal of hazardous materials will be in accordance with the contract.

PART 2 – PRODUCTS

N/A

PART 3 - EXECUTION

3.1 PREPARATION

A. Inspect site and verify with Engineer/Architect, items designated to remain.

B. Locate and protect utility lines. Preserve in operating condition active utilities traversing site:

1. Notify Engineer/Architect immediately of damage to or when unknown existing utility lines are encountered.
2. When utility lines which are to be removed are encountered within area of operations, notify Engineer/Architect in ample time to minimize interruption of service.

C. Notify utility authorities before starting clearing and grubbing.

D. Keep roads and walks free of dirt and debris.

3.2 CLEARING

A. Clear areas shown on the plans of all obstructions, except those landscape features that are to be preserved. Such obstructions include but are not limited to remains of houses and other structures, foundations, floor slabs, concrete, brick, lumber, plaster, septic tank drain fields, basements, abandoned utility pipes or conduits, equipment, fences, retaining walls, and other items as specified on the plans. Remove vegetation and other landscape features not designated for preservation, curb and gutter, driveways, paved parking areas, miscellaneous stone, sidewalks, drainage structures, manholes, inlets, abandoned railroad tracks, scrap iron, and debris, whether above or below ground. Removal of live utility facilities is not included in this item. Remove culverts, storm sewers, manholes and inlets in proper sequence to maintain traffic and drainage.

B. In areas receiving embankment, remove obstructions not designated for preservations to 2 ft. below natural ground. In areas to be excavated, remove obstruction to 2 ft. below the excavation level. In all other areas, remove obstruction to 1 ft. below natural ground. When allowed by the plans or directed, cut trees and stumps off to ground level. Plug the remaining ends of abandoned underground structures over 3 inches in diameter with concrete to form a tight closure. Backfill, compact, and restore areas where obstructions have been removed, unless otherwise directed. Use approved material for backfilling. Accept ownership, unless otherwise directed, and dispose of removed materials and debris at location off the sight in accordance with local, state and federal requirements.

END OF SECTION

SECTION 31 23 23.53

CEMENT STABILIZED SAND BACKFILL

PART 1 – GENERAL

1.1 DESCRIPTION

A. At the discretion of the Engineer, Cement Stabilized Sand meeting the following specification may be allowed as trench backfill.

1.2 MEASUREMENT AND PAYMENT

A. Cement-stabilized sand shall be considered a part of the backfill requirement for the unit installed and shall be considered subsidiary to the length of the unit bid. If the cement stabilized sand is indicated to be a separate construction item for bulk backfill then the cement stabilized sand shall be measured per cubic yard as indicated on the plans.

1.3 SUBMITTALS

A. Mix Design

PART 2 – PRODUCTS

2.1 MATERIALS

A. CEMENT - Type I Portland Cement conforming to ASTM C150.

B. SAND - Clean durable sand meeting grading requirements for fine aggregates of ASTM C33, and the following requirements:

1. Classified as SW, SP, or SM by the United Soil Classification System of ASTM D2487.
2. Deleterious materials:
   a.) Clay lumps, ASTM C142; less than 0.5 percent.
   b.) Lightweight pieces, ASTM C123; less than 5.0 percent.
   c.) Organic impurities, ASTM C40; color no darker than standard color.
   d.) Plasticity index of 4 or less when tested in accordance with ASTM D4318.
3. Water: Potable water, free of oils, acids, alkalis, organic matter, or other deleterious substances, meeting requirements of ASTM C94.

2.2 TESTING REQUIREMENTS

A. Mixing plant inspections may be performed periodically. Material samples shall be collected and tested for change in material characteristics.

B. Random samples of delivered product will be taken in the field at point of delivery for each day of placement in the work area. Specimens will be prepared in accordance with ASTM D1632 and tested for compressive strength in accordance with ASTM D1633.

C. The cement content may be tested at the discretion of the City.

PART 3 – EXECUTION

3.1 CONSTRUCTION METHODS

A. DESIGN REQUIREMENTS

Design sand-cement mixture to produce a minimum unconfined compressive strength of 50 pounds per square inch in 48 hours and 100 pounds per square inch in 7 days when compacted to 95% in accordance to ASTM D558 and when cured in accordance with ASTM D1632, and tested in accordance with ASTM D1633. Mix for general use shall contain a minimum of 1-½ sacks of cement per cubic yard. Mix for use as sanitary sewer embedment within 9 feet of waterlines shall contain 2 sacks of cement per cubic yard. Compact mix with moisture content between 0% to 2% above optimum.

The maximum compressive strength in 7 days shall be 400 psi. Backfill that exceeds the maximum compressive strength shall be removed by the contractor.

B. MIXING

1. Thoroughly mix sand, cement, and water in proportions specified by the Design Requirements using a pugmill-type mixer. The plant shall be equipped with automatic weight controls to ensure correct mix proportions.

2. Stamp batch ticket at plant with time of loading directly after mixing. Material not placed and compacted within 4 hours after mixing shall be rejected.

C. PLACEMENT

1. Place sand-cement mixture in 8-inch-thick lifts and compact to 95% of ASTM D558 unless other specified by the engineer. The moisture content during compaction shall be between 0% to 2% above optimum. Perform and complete compaction of sand-cement mixture within 4 hours after addition of water at plant.

2. Do not place or compact sand-cement mixture in standing or free water.

END OF SECTION

SECTION 31 23 33

EXCAVATING, TRENCHING, AND BACKFILLING

All excavation will meet the most current OSHA Regulations. See SECTION 31 50 50 – TRENCH SAFETY for trench safety requirements.

(Sentences and/or paragraphs that are double underlined indicate revisions that were made from the 2009 specification.)

PART 1 - GENERAL

1.1 DESCRIPTION

A. The work to be performed under this Specification shall consist of furnishing all labor, equipment and materials and performing all operations in connection with the excavating, trenching, and backfilling for pipelines as shown on the plans and as specified herein.

1.2 MEASUREMENT AND PAYMENT

A. All trench excavation, backfill and compaction are not considered pay items. Payment for these items shall be included in the unit price laid in the Proposal for each size of pipe at their respective depths. This unit price shall be full remuneration for performing the trench and backfill complete including grading, bell holes, sheeting, dewatering, tamping, and water soaking; and including the furnishing of sewer pipe, all equipment, labor, materials, power, teams, tools, and transportation necessary or incidental thereto; but not including tunneling, or boring, all of which will be paid for extra.

PART 2 – PRODUCTS

2.1 MATERIALS

A. Materials for pipe embedment will meet TCEQ Regulations for depth of bury and class of pipe and City of Bryan/City of College Station Unified Embedment Details as shown on the Plans.

B. Concrete (For encasement or blocking) See SECTION 03 30 00 - CONCRETE.

Material shall conform to ASTM C94. The compressive strength of the concrete shall be at least 2,000 psi and shall contain at least four (4) sacks of cement per cubic yard.

C. Cement stabilized sand. See SECTION 31 23 23.53 – CEMENT STABILIZED SAND BACKFILL.

2.2 TESTING REQUIREMENTS

A. Compaction tests for all backfill may be required for every 200 linear feet of trench and for each twelve-inches (12”) vertically. Density tests, shall be measured as one unit for each test. The Owner shall pay for Geotechnical tests ordered that meet the requirements of the plans and specifications. Failed tests shall be charged to the Contractor. Refer to City Standard Trench Detail for compaction effort requirements.

PART 3 – EXECUTION

3.1 CONSTRUCTION METHODS

A. CONTROL OF WATER

Provide sufficient pumping equipment, in good working order, available at all times to remove any water that accumulates in excavations. When the excavation crosses a drainage pathway, the contractor shall provide for means of alternate drainage. The discharge of dewatering equipment shall not cause damage to private or public property.

B. SHEETING, SHORING, AND BRACING

See SECTION 31 50 50 – TRENCH SAFETY.

In caving ground, or in wet, saturated, or flowing materials, the contractor shall sheet, shore, or brace the sides of the trench so as to maintain the excavation properly in place. When excavations are made adjacent to existing building or other structures or in paved streets, particular care must be taken to adequately sheet, shore, and brace the sides of the excavation to prevent undermining of, or settlement beneath, the structures or pavement. Underpinning of adjacent structures or pavement shall be done by the Contractor at his own cost and expense, in a manner satisfactory to the Engineer and when required by the Engineer. The pavement shall be removed, the void satisfactorily refilled and compacted, and the pavement replaced by the Contractor. The entire expense of such removal and subsequent replacement thereof shall be borne by the Contractor. Sheeting, shoring, and bracing shall not be left in place, unless otherwise provided for in the contract or authorized by the Engineer. The removal of sheeting, shoring and bracing shall be done in such a manner as not to endanger or damage either new or existing structure, private or public properties, and so as to avoid cave-ins or sliding of the banks. All holes or voids left by the removal of the sheeting, shoring, or bracing shall be immediately and completely filled and compacted with suitable materials.

C. GUARANTEE

1. Guarantee the backfilling of excavation and trenches against settlement for a period of one (1) year after the final completion of the contract under which the work is performed.
2. Make all repairs or replacements made necessary by settlement, including refilling, compacting, and reseeding or resodding the upper portion of the ditch and repairing broken or settled pavements, driveways, and sidewalks within five (5) days after notice from the Engineer.

D. PREPARATION

1. Site Preparation

Prepare the construction site for construction operations by removing and disposing of all obstructions and objectionable materials in accordance with contract documents.

2. Alignment, Grade and Minimum Cover

a. General

The water and sewer mains shall be laid and maintained to lines and grades established by the plans and specifications with fittings, valves, hydrants,

manholes and clean-outs at the required locations, unless otherwise pre-approved by the Engineer. Valve-operating stems shall be oriented in a manner to allow proper operation. Hydrants shall be installed plumb.

b. Cut sheets shall be provided to the City's Inspector. The contractor shall determine the alignment and grade or elevation of the pipeline from offset stakes. Offset stakes shall be placed every 100 feet. The contractor shall also provide a continuous chalk line along the alignment of the trench for use by the operator of the excavating equipment. The contractor shall provide a laser beam and grade pole to assist in grading the ditch to the proper elevation.

c. Should the ditch be graded below the required elevation, bring subgrade to the required elevation with cement stabilized sand or rounded pea gravel. The use of excavating materials for this application will not be allowed.

d. Where pipe grades or elevations are not definitely fixed by contract drawings, trenches shall be excavated to a depth sufficient to provide a minimum depth of backfill cover over the pipe. Greater pipe cover depths may be necessary for clearance beneath existing pipes, conduits, drains, drainage structures, or other obstructions encountered at normal pipe grades. Measurement of pipe cover depth shall be made vertically from the outside top of pipe to finished ground or pavement surface elevations.

3. Prior Investigation

Prior to excavation, investigation shall be made to the extent necessary to determine the location of existing underground structures and conflicts. Care should be exercised by the Contractor during excavation avoid damage to existing structures.

4. Unforeseen Obstructions

When obstructions that are not shown on the plans are encountered during the progress of work and interfere so that an alteration of the plans is required, the Engineer will alter the plans or order a deviation in line and grade or arrange for removal, relocation or reconstruction of the obstructions.

5. Clearance

When crossing existing pipelines or other structures, alignment and grade shall be adjusted as necessary, with the approval of the Engineer, to provide clearance as required by federal, state or local regulations or as deemed necessary by the Engineer to prevent future damage or contamination of either structure.

E. EXCAVATION

All excavation shall meet the most current OSHA regulations.

1. Classification

Excavation of trenches for pipelines is unclassified. Soils will be classified utilizing OSHA Standards and Regulations. The Contractor shall assume that the site contains the worse type of soils and make provisions for shoring the work area.

2. Trench Excavation

   a. General

      The trench shall be excavated to the required alignment, depth and width and in conformance with all federal, state and local regulations for the protection of the workmen.

   b. Trench Preparation

      i) Trench preparation shall proceed in advance of pipe installation for only as far as pipe will be laid that day.

      ii) The contractor shall keep the trench dry from both storm water and seepage from the sides of the trench. Discharge from any trench dewatering pumps shall be conducted to natural drainage channels, storm sewers or a pre-approved reservoir. Do not discharge into any municipal sewer system without municipal approval. The contractor shall be responsible for cleaning any storm drain system, which was used for dewatering discharge.

      iii) Excavated material shall be placed in a manner that will not obstruct the work nor endanger the workmen, obstruct sidewalks, driveways, or other structures and shall be done in compliance with federal, state, or local regulations.

3. Pavement Removal

   Removal of pavement and road surfaces shall be a part of the trench excavation, and the amount removed shall depend upon the width of trench required for installation of the pipe and the dimensions of area required for the installation of valves, hydrants, specials, manholes or other structures. The dimensions of pavement removed shall not exceed the dimensions of the opening required for installation of pipe, valves, hydrants, specials, manholes and other structures by more than twelve (12”) inches in any direction, unless otherwise required or pre-approved by the Engineer.

4. Width

   See City Standard Bedding and Trench Detail.

5. Bell Holes

   Holes for the bells shall be provided at each joint, but shall be no larger than necessary for joint assembly and assurance that the pipe barrel will lie flat on the trench bottom. Other than noted previously, the trench bottom shall be true and even in order to provide support for the full length of the pipe barrel, except that a slight depression may be provided to allow withdrawal of pipe slings or other lifting tackle.

6. Subgrade in Earth

   a. Where a firm and stable foundation for the pipe can be obtained in the natural soil, and where special embedment is not shown on the plans, or specified herein, carefully and accurately trim the bottom of the trench to fit the lower portion of the pipe barrel. The bottom of the trench shall be firm, stable and free of standing water.

   b. If water is allowed to collect in an originally dry trench after a reasonable time has passed to complete the embedment of the pipe, as determined by the Engineer, the contractor shall place a minimum of four (4”) inches of clean rounded pea gravel in the ditch and pump out all accumulated water before

placing the pipe. No deleterious materials will be allowed in the gravel. No extra compensation will be allowed for this work.

c. Where wet, soft, or spongy material is encountered in the excavation at subgrade level, the contractor shall remove such material at the direction of the Engineer and replace it with crushed stone of sufficient quantity such that when fully compacted, the subgrade is firm and stable.

7. Subgrade in Rock

a. When excavation of rock is encountered, all rock shall be removed to provide a clearance of at least six (6") inches below and on each side of all pipe, valves and fittings for pipe sizes twenty-four (24") inches or smaller, and nine (9") inches for pipe sizes thirty (30") inches and larger. When excavation is completed, the proper embedment material shall be placed on the bottom of the trench to the previously mentioned depths, leveled and tamped.

b. These clearances and bedding procedures shall also be observed for pieces of concrete or masonry and other debris or subterranean structures, such as masonry walls, piers or foundations that may be encountered during excavation.

c. The installation procedures specified in this section shall be followed when gravel formations containing loose boulders greater than eight (8") inches in diameter are encountered.

d. In all cases, the specified clearances shall be maintained between the bottom of all pipe and appurtenances and any part, projection or point of rock, boulder or stones of sufficient size and placement, which, in the opinion of the Engineer, could cause a fulcrum point.

F. CONCRETE ENCASEMENT

The Contractor shall place 2,000 psi concrete encasement under and around pipe as shown on the embedment detail, and provide necessary anchors to prevent the pipe from floating out of place. The contractor shall remove and relay any pipes that are floated out of proper position

G. BACKFILLING

1. General

a. The Contractor shall not begin backfilling until approval has been obtained from the Inspector. Backfilling includes refilling and consolidation of the fill in trenches and excavations up to the natural ground surface or road grade.

b. Backfill shall be accomplished in accordance with the specified laying condition as shown on the plans.

2. Backfill Material

a. All backfill material shall meet latest edition of ASTM D2321 unless otherwise specified by the Engineer.

b. If excavated material is indicated on the drawings or specified for backfill, and there is a deficiency due to a rejection of part thereof, the contractor shall provide the required amount of sand, gravel or other pre-approved material.

3. Do not leave trenches open overnight without backfilling to the natural ground level. Steel plates (1/2" in thickness) may be used to cover open trenches only with the approval of the Engineer.

4. Compaction

   Compaction requirements are as specified on the plans.

END OF SECTION

SECTION 31 25 13

EROSION AND SEDIMENTATION CONTROL

PART 1 - GENERAL

1.1 DESCRIPTION

A. The work covered by this section consists of the installation and maintenance of all erosion siltation control devices, wash down areas, or seeding and sodding applications necessary to effectively prevent storm water pollution of adjoining or downstream areas that may occur as a direct or indirect result of the construction of this project. The contractor is responsible for creating and maintaining the storm water pollution prevention plan by utilizing the base sheets and narrative provided in the bid documents. The contractor is also responsible for submitting the Notice of Intent (NOI) and Notice of Termination (NOT) and conducting inspections as required by the Texas Commission on Environmental Quality (TCEQ.) The required forms for these activities are included in the bid documents.

The engineer will provide:
1. Base Sheets for Erosion Control Plan (ECP)
2. The Narrative for the Storm Water Pollution Prevention Plan (SWPPP)

The contractor will generate, submit, and maintain the:
1. ECP
2. SWPPP
3. NOI (if required)
4. NOT (if required)

1.2 MEASUREMENT AND PAYMENT

Erosion and Sediment Control is measured as a lump sum item.

The work and materials as prescribed by this item will be paid on the following schedule:

A. 25% of the bid value shall be paid when the erosion control plan is fully detailed and implemented, the NOI (if required) is submitted to both TCEQ and the City Inspector, and all of the initial erosion control devices have been installed and are in working order.

B. 50% of the value will be prorated for the installation and maintenance of erosion control devices during the course of construction as a percent of the total contract value. If the sediment trapping devices on the site appear to be un-maintained, no payment of this portion of the item shall be paid.

C. 25% will be paid at the completion of construction when the site is stabilized, the NOT is submitted to both TCEQ and the City Inspector and all erosion control devices are removed from the site.

1.3 SUBMITTALS

A. The contractors shall submit the initial erosion control plan along with the NOI (if required) prior to receiving a notice to proceed.

B. If required, the Contractor is responsible for filing a “Notice of Intent” (NOI.) The contractor shall comply with all TCEQ and EPA regulations and pay the filing fees associated with the regulations. Fees associated with these regulations are subsidiary to the bid item Storm Water Prevention. The forms are available at:

http://www.tceq.state.tx.us/assets/public/permitting/waterquality/forms/20022.pdf
http://www.tceq.state.tx.us/assets/public/permitting/waterquality/forms/20023.pdf

C. Said NOI must be postmarked two days before construction begins. NOI's and NOT's shall be submitted to the address shown on the forms. It is the Contractor's responsibility to file and provide the owner a copy of the Notice of Termination (NOT) at the completion of the project.

PART 2 – PRODUCTS

N/A

PART 3 – EXECUTION

3.1 GENERAL

A. It is the responsibility of the Contractor to utilize whatever techniques are necessary to address erosion problems as they occur during construction.

B. Siltation control and sediment trapping devices shall be installed prior to site clearing, grading or utility construction operations. All devices should be positioned so as to effectively remove silt from storm water before it leaves the site. Of particular concern, are gravel or stone blankets placed at construction traffic exits and entrances. These controls should be closely monitored to see that they trap sediment before it reaches the existing street and drainage system.

C. Construction activities should be phased to expose a minimum of graded area at one time. Earth exposed by the construction process shall be re-vegetated every two weeks until vegetation is established. Re-vegetation shall require seeding, hydromulching or sodding. Fresh growth of vegetation shall eliminate the need for additional re-vegetation but does not constitute stabilization.

D. Should a construction process remove any portion of the perimeter controls, the controls should be replaced in accordance with the TCEQ guidelines. Prior to the completion of the project, all bare areas shall be re-vegetated with a cellulose fiber hydromulch seeding process or sodded.

E. Siltation control devices placed at storm drain inlets and culverts shall be removed by the Contractor once the site has been stabilized.

3.2 MAINTENANCE AND INSPECTION

A. The contractor shall familiarize himself with the erosion control requirements of TCEQ. The site superintendent, or his representative, shall make a visual inspection of all structural and/or natural controls and newly stabilized areas as required by TCEQ, especially after a rainfall to insure that all controls are maintained and properly functioning. Any damaged controls shall be repaired prior to the end of the work day, including re-seeding and mulching or re-sodding if necessary. All inspections shall be documented with a written report. Reports shall include the effectiveness of erosion control measures, construction activities conducted since the last report and their location. Reports shall be maintained by the Contractor along with the Erosion Control Plan per the TCEQ guidelines.

B. The contractor is responsible for the ECP. The contractor shall continuously update the plan with all changes. Areas already stabilized shall be noted on the plan. All sediment trapping devices shall be installed as soon as practical after the area has been disturbed (never more than 14 days). All sediment trapping devices shall be cleaned when the sediment level reaches 25% capacity. Sediment shall be disposed of by spreading on site or hauling away if not suitable for fill.

C. The Contractor shall be responsible for any and all materials, improvements, and maintenance activities necessary to keep dust, silt, and mud from leaving the work zone, including being tracked by vehicles traveling throughout the zone.

D. Should, in the opinion of the Owner, the Contractor fail to prevent the escape of dust or contain silt and mud within the project, after due notification by the City Representative, Owner forces will be used to clean up those affected areas, and the cost of same will be deducted from the contract.

E. Prior to Substantial Completion, the Contractor shall verify that no dust, silt, or mud exists within the work zone in deposits deeper than two inches (2") as a result of the contractor's containment procedures. Should the Contractor claim final completion without removing such deposits, they will be removed by Owner forces and the cost of which shall be deducted from the contract.

END OF SECTION

SECTION 31 50 00

TRENCH SAFETY

PART 1 - GENERAL

1.1 DESCRIPTION

A. The work specified under this section requires the Contractor to provide for the safety of the workmen in strict compliance with 29 CFR Part 1926 1993 (Revised as of July 1, 1996 of latest Edition or Revision to) Excavations and Applicable Subparts. The submission of a "TRENCH SAFETY PLAN" which shall fully satisfy the requirements of this specification is required prior to a notice to proceed to start the project.

1.2 MEASUREMENT

A. MEASUREMENT

Measure "Trench Safety" as shown on the bid proposal. Shoring of trench at manholes and other unusual structures to be included in this cost.

B. PAYMENT

Pay for "Trench Safety" as shown on the bid proposal. Payment to be full compensation for all work described herein. There will be no increase in the Contract price because of the incorporation of CONTRACTOR's Trench Safety Plan or CONTRACTOR's detailed plans and specifications for the trench safety system into the bid documents and the Construction Contract. There will be no increase in the Contract price because of modifications to CONTRACTOR's plan and/or the CONTRACTOR's detail plans and specifications for the trench safety system, whether or not the result of unforeseen or differing site or soil conditions.

"Trench Safety Plan" shall be included as part of the "Trench Safety" bid item and shall not be paid for as a separate pay item.

1.3 SUBMITTALS

A. CERTIFICATES

Submit manufacturer's "Certificate of Compliance," stating that the devices (trench boxes, speed shoring, etc.) to be used for trench safety comply with the requirements of this specification. The certificate should show the design assumptions and limitations of the device and should be sealed by an engineer registered and licensed to practice in the state of Texas.

B. TRENCH SAFETY PLAN

Submit a detailed TRENCH SAFETY PLAN for all work areas. Calculations shall be provided for any areas beyond the capacity of the trench box or speed shoring and sealed by an engineer registered and licensed to practice in the state of Texas. This plan shall include evacuation routes for personnel.

C. COMPETENT PERSON

Contractor shall have a "Competent Person" with regard to OSHA standards, on site at all times. Competent person is generally defined as an individual who, by training and experience, is knowledgeable of applicable standards, capable of identifying hazards, is

designated by the employer, and has the authority to take actions as needed. Contractor shall provide written proof showing the competent person(s) for the work being performed.

PART 2 – PRODUCTS

2.2 MATERIALS

A. MATERIALS

1. Timber

Trench sheeting materials shall be full size, a minimum of 2 inches in thickness, solid and sound, free from weakening defects such as loose knots and splits.

2. Sheet Piling

Steel sheet piling shall conform to one or more of ASTM A328/328M, ASTM A572/A572M/ ASTM A690/A690M material requirements.

3. Structural Steel

Steel for stringers (wales) and cross braces shall conform to ASTM A588.

4. Trench Boxes

Steel trench Boxes to be constructed of steel conforming to ASTM A36/A36M. Connecting bolts used to conform to ASTM A307. Welds shall conform to the requirements of AWS D1.1.

5. Miscellaneous

Miscellaneous materials to be utilized shall conform to applicable ASTM standards.

B. REFERENCED SPECIFICATIONS

The publications listed below form a part of this Specification to the extent referenced. The publications are referred to in the text by basic designation only.

American Society of Testing and Materials (ASTM)

ASTM A36/A36M	1997 Standard Specification for Carbon Structural Steel
ASTM A307	1997 Revision A-Standard Specification for Carbon Steel Bolts and Studs, 60,000 psi Tensile length
ASTM A328/A328M	1996 (REV) Standard Specification for Steel Sheet Piling
ASTM A572/A572M	1997 Standard Specification for High-Strength Low-Alloy Columbium-Vanadium Steels of Structural Quality
ASTM A588/A588M	1997 Standard Specification for High-Strength Low-Alloy Structural Steel With 50 ksi (345 MPa) Minimum Yield Point to 4 inch (100 mm) thick
ASTM A690/A690M	1994 Standard Specification for High-Strength Low-Alloy Steel H-Pipes and Sheet Piling for Use in Marine Environments

American Welding Society, Inc. (AWS)

AWS D1.1	1998 Structural Welding Code-Steel

Occupation Safety And Health Administration (OSHA)

29 CFR Part 1926 1993 (Revised as of July 1, 1996 of latest Edition or Revision to) Excavations and Applicable Subparts

PART 3 – EXECUTION

3.1 CONSTRUCTION METHODS

A. GENERAL:

The trench safety system shall be constructed, installed and maintained in accordance with the Trench Safety Plan as outlined in 131.03. Bed and backfill pipe to a point at least one (1) foot above top of pipe or other embedded items prior to removal of any portion of trench safety system. Bedding and backfill shall be in accordance to other applicable Specification Sections. Backfllling and removal of trench supports shall be in accordance with Contractor's Trench Safety Plan. Removal of trench safety system to be accomplished in such a manner to cause no damage to pipe or other embedded items. Remove no braces or trench supports until all personnel have evacuated the trench. The trench shall be backfilled to within 5 feet of natural ground prior to removal of entire trench safety system.

B. SUPERVISION:

Provide competent supervisory personnel at each trench while work is in progress to ensure Contractor's methods, procedures, equipment and materials pertaining to the safety systems in this Section are sufficient to meet requirements of OSHA Standards.

C. INSPECTION:

The CONTRACTOR shall make daily inspection of trench safety system to ensure that the system meets OSHA requirements. Daily inspection shall be made by competent personnel. If evidence of possible cave-ins or slides is apparent, all work in the trench is to cease until necessary precautions have been taken to safeguard personnel entering trench. The CONTRACTOR shall maintain permanent record of daily inspections.

D. TIMBER SHEETING

Timber sheeting and size of uprights, stringers (wales,) and cross bracing to be installed in accordance with the TRENCH SAFETY PLAN. Place cross braces in true horizontal position, spaced vertically, and secure to prevent sliding, falling or kick outs. Cross braces to be placed at each end of stringers (wales) in addition to other locations required. Cross braces and stringers (wales) to be placed at splices of uprights, in addition to other locations required.

E. STEEL SHEET PILING

Steel sheet piling of equal or greater strength may be used in lieu of timber trench shoring shown in the OSHA tables (proposed standards). Drive steel sheet piling to a least minimum depth below trench bottom as recommended by CONTRACTOR's Registered Licensed Professional Engineer providing design. Place cross braces in true horizontal position and spaced vertically. Secure to prevent sliding, falling, or kick outs. Cross braces to be placed at each end of stringers (wales), in addition to other locations required.

F. MAINTENANCE OF SAFETY SYSTEM

The safety system to be maintained in the condition as shown on the Trench Excavation and Shoring Safety Plan as designed by the CONTRACTOR's Registered Licensed Professional ENGINEER. The CONTRACTOR shall take all necessary precaution to ensure the safety systems are not damaged during their use. If at any time during its use a safety system is damaged, personnel to be immediately removed from the trench

excavation area and the safety system repaired. The CONTRACTOR is to take all necessary precautions to ensure no loads, except those provided for in the plan, are imposed upon the trench safety system.

END OF SECTION

SECTION 31 78 00

PIPE BORING, JACKING, TUNNELING AND ENCASEMENT

PART 1 - GENERAL

1.1 DESCRIPTION

A. The work to be performed under this Specification shall consist of furnishing and installing all materials and equipment and performing all labor required to install pipelines crossing under highways, railroads, and streets by boring, jacking, and tunneling, as specified herein. **All sewer bores will be accomplished by dry mechanical bore unless otherwise pre-approved by the Engineer.** Water line bores may utilize the wet boring technique. All carrier pipes within the encasement conduit shall be restrained joint pipe of the type specified on the plans, or pre-approved by the Engineer.

B. When the work per this item falls within a TxDOT or Railroad right of way, the stricter of the applicable standards apply. This requirement includes all insurance, notification, permitting, signage, etc. required by the right of way owner.

1.2 MEASUREMENT AND PAYMENT

A. MEASUREMENT

1. Openings provided by boring, jacking, and tunneling (including carrier pipe) will be measured by the linear foot along the centerline of the opening, as measured from end of pipe to end of pipe placed by boring, jacking and tunneling. There will not be any classification for payment according to depth.

2. Concrete support slab in the pits and all other work necessary to meet the requirements of the Texas Department of Transportation, railroad company, County, and City will not be measured.

3. Openings provided by boring, jacking and tunneling will be paid for at the unit price bid per linear foot. The unit price bid for boring jacking and tunneling shall be full compensation for furnishing and placing all materials, labor, tools, carrier pipe, carrier pipe restraint, casing spacers, equipment, pits, concrete support slabs and incidentals necessary to complete the work.

1.3 SUBMITTALS

A. Submit manufacturer's product data on encasement pipe.

B. Submit manufacturer's "Certificate of Compliance" to this part of the specifications for materials furnished for the project.

C. The Contractor or subcontractor performing the work described under this section shall demonstrate technical skill and experience in previous work of this nature. Work experience shall be submitted to the Engineer.

D. Casing spacer data sheets demonstrating compliance with this specification.

PART 2 – PRODUCTS

2.1 MATERIALS

Steel Pipe, Ductile Iron Pipe, Reinforced Concrete Pipe, and PVC Pipe may be used as encasement material, unless otherwise shown on the plans. The nominal inside diameter of the encasement pipe shall be as indicated below, unless otherwise shown on the plans.

A. STEEL PIPE

Encasement pipe shall conform to ASTM Specification A134, Mild Carbon Steel, A139, Grade A, or AWWA C200-91 Grade B, butt-welded joints with entire circumference welded by a certified welder shall be in accordance with AWWA C200-86 Section 3. All steel casing shall have a wall thickness as shown in the table below:

Carrier Pipe Nominal Diameter	Casing Pipe Nominal Diameter	Casing Pipe Minimum Thickness[1]
6”	14”	3/8”
8”	16”	3/8”
10”	18”	3/8”
12”	20”	3/8”
16”	24”	3/8”
18”	30”	1/2”
24”	36”	1/2”

1. Casing Pipe Thickness for Railroad crossings shall be a minimum of 1/2-inch thick regardless of diameter.
2. Nominal diameter of casing pipe may be larger as needed for restrained joint pipe.

B. DUCTILE-IRON PIPE

Encasement pipe shall conform to the current AWWA C150 and C151 standards. Pipe shall be thickness Class 250 or greater, unless otherwise shown on the plans.

C. REINFORCED CONCRETE PIPE

Encasement pipe shall conform to the current ANSI C-76 standards. Pipe shall be Class III or IV, unless otherwise shown on the plans.

D. PVC PIPE

Encasement pipe shall conform to the current ASTM D2241 or AWWA C905 standards. Pipe shall be DR 26 or SDR 26, unless otherwise shown on the plans. PVC pipe shall be used only when specified on the plans.

E. GROUT

Grout shall be in accordance with SECTION 04 05 12 – MORTAR AND GROUT.

F. CASING SPACERS

Stainless Steel casing spacers shall be required in all casing pipes and shall be manufactured by Cascade Products, Advance Products & Systems, Inc model no. SSI8 or approved equal. The casing spacers shall be affixed to the carrier pipe at a spacing of 6’8” or per the manufacturers recommendations if less than 6’8”.

G. END SEALS

End seals shall be 1/8" thick synthetic rubber secured with stainless steel banding straps. Other end seals shall be constructed only as pre-approved by the engineering inspector.

2.2 TESTING REQUIREMENTS

A. ALLOWABLE TOLERANCES

Where grades or elevations are shown on the plans for the pipeline to be installed by boring, jacking, and tunneling operations, maximum deviation of plan elevation shall be 0.2 foot. The maximum deviation of alignment over the length of the bore shall be 0.2 foot. The Engineer shall determine the corrective action to be taken for tolerances above those stated in this specification.

PART 3 – EXECUTION

3.1 CONSTRUCTION METHODS

A. ENCASEMENT REQUIREMENTS

Encasement pipe shall be required for all water mains crossing major collector and arterial street crossings. Encasement pipe for sewer mains shall be placed as required by the City Engineer. The casing pipe shall extend two feet (2') beyond the back of curb. Encasement pipes may be installed by open cut with the approval of the engineer.

B. BORE AND TUNNEL PITS

Unless more stringent requirements regarding location of bore and tunnel pits are noted on the plans, or are required by TXDOT, Railroad, County, or City, to conform to the requirements that follow:

1. The Conduit to be installed by boring, jacking and tunneling shall extend to distances as shown in the Standard Details.
2. If necessary to prevent cave-ins, sheet, shore, or brace the pit in accordance with OSHA regulations. All pits shall be covered with 1/2" thick steel plates. Steel plates shall be on-site prior to excavating the pit. If bore pits are too big to cover with steel plates, Contractor shall install chain link fence, completely and securely, around exposed pit to a height of 6 feet.
3. General: Unless otherwise noted, extend auger hole 10 feet beyond edge of pavement, railroad tie, or other structure. The hole is to be bored mechanically, using a pilot hole. An approximate 2-inch hole shall be bored the entire length of the crossing and shall be checked for line and grade on the opposite end of the bore from the work pit. This pilot hole shall serve as the centerline of the larger diameter hole to be bored. The use of water or other fluids in connection with the boring operation will be permitted only to the extent to lubricate cuttings, jetting will not be permitted. In unconsolidated soil formations, a gel-forming colloidal drilling fluid consisting of at least 10 percent of high-grade carefully processed bentonite may be used to consolidate cuttings of the bit, seal the walls of the hole, and furnish lubrication for subsequent removal of cuttings and installation of the pipe immediately thereafter. Overcutting in excess of one inch shall be remedied by pressure grouting the entire length of the installation.

3.2 CONSTRUCTION METHODS FOR DRY BORING

A. All sewer bores will be accomplished by dry mechanical bore unless otherwise pre-approved by the Engineer.

B. Only workmen experienced in boring operations shall perform the work.

C. The use of water or other fluids in connection with the boring operation will NOT be permitted except for a minor required amount of bentonite solution for cutting head.

D. The casing pipe shall be placed in the bore hole simultaneously while boring is being performed. Installing the encasement conduit immediately by pulling it in place from opposite the boring machine or by jacking the conduit through the bore is not acceptable. Take proper care to secure the joints of the conduit as subsequent sections are installed by welding joints. Provide a steel rail or timber cradle in the pit to support and guide the conduit in its installation.

E. If after completion of the installation of the conduit, there is more than one inch (1") clearance between the outside of the barrel of the conduit and the wall of the bore, grouting of these voids will be required. If during construction of the bore, a cave-in occurs within the bore, grouting of the voids between the conduit and the walls of the bore will be required throughout the length of the bore.

F. Conform to the requirements of the Texas Department of Transportation, Railroad Company, County, or City having jurisdiction over the right-of-way involved, as to details of construction methods and time of construction. All work necessary to meet the requirements of the Texas Department of Transportation, Railroad Company, County, or City will be considered incidental to the installation of the pipeline in the right-of-way. The Contractor shall abide by the more stringent of these specifications, or the specifications of the regulatory agencies.

3.3 CONSTRUCTION METHODS FOR WET BORING

A. All sewer bores will be accomplished by dry mechanical bore unless otherwise pre-approved by the Engineer. (see above)

B. Only workmen experienced in boring operations shall perform the work. A pilot hole must be successfully completed to the satisfaction of the engineer prior back reaming the bore.

C. The use of water or other fluids in connection with the boring operation will be permitted only to lubricate cuttings. Jetting will not be permitted. In consolidated soil formations, a gel-forming colloidal drilling fluid consisting of at least ten (10%) percent of high-grade bentonite may be used to consolidate cuttings of the bit, seal the walls of the hole, and lubricate removal of cuttings and installation of the pipe immediately thereafter.

D. While boring is being performed, install the encasement conduit immediately by pulling it in place from opposite the boring machine or by jacking the conduit through the bore. Encasement conduit may be placed after the boring operation is complete, if permission is obtained from TXDOT, the railroad company, the City, or the County. Take proper care to secure the joints of the conduit as subsequent sections are installed, by use of cables or welding joints. Provide a steel rail or timber cradle in the pit to support and guide the conduit in its installation.

E. If after completion of the installation of the conduit, there is more than one inch (1") clearance between the outside of the barrel of the conduit and the wall of the bore, grouting of these voids will be required. If during construction of the bore, a cave-in occurs within the bore, grouting of the voids between the conduit and the walls of the bore will be required throughout the length of the bore.

F. Grouting material and equipment shall be on the jobsite before beginning installation of the conduit, in order that the grouting around the encasement conduit is to be started immediately after pipe is in place.

G. Conform to the requirements of the Texas Department of Transportation, Railroad Company, County, or City having jurisdiction over the right-of-way involved, as to details of construction methods and time of construction. All work necessary to meet the requirements of the Texas Department of Transportation, Railroad Company, County, or City will be considered incidental to the installation of the pipeline in the right-of-way. The Contractor shall abide by the more stringent of these specifications, or the specifications of the regulatory agencies.

3.4 CONSTRUCTION METHODS FOR JACKING

A. Unless otherwise specified, the methods and equipment used in jacking conduit shall be the Contractor's option, provided that the proposed method is pre-approved by the Engineer. Such approval, however, shall in no way relieve the Contractor of the responsibility for making a satisfactory installation meeting the criteria set forth herein.

B. If, after completion of the installation of the conduit, there is more than one (1") inch clearance between the outside of the barrel of the conduit and the wall of the tunnel, the Contractor shall completely grout the conduit in place throughout its entire length. If, during the jacking operation, a cave-in occurs, the Contractor shall grout the entire conduit in place throughout its entire length.

3.5 CONSTRUCTION METHODS FOR TUNNELING

A. Excavate the tunnel in such a manner and to such dimensions that will permit placing of the proper supports **in accordance with OSHA Regulations** necessary to protect the excavation. Make adequate provisions for the safety and health of the workmen. Use only air or electric powered equipment in the tunnel. Provide adequate illumination and ventilation.

B. Excavate only enough earth to allow installation of the tunnel liner plate. Remove earth from within tunnel and install the next section of tunnel liner plates.

C. After completion of the tunnel, or at intervals directed by the Engineer, grout the entire void between the tunnel lining. If after completion of the tunnel there are sags in invert of the liner that exceed 0.2 feet of a straight line projected through the tunnel, grout the invert to eliminate the sags.

3.6 SPECIAL PROVISIONS FOR BELL & SPIGOT ENCASEMENT PIPE

A. Where pipe using bell and spigot joints is installed as encasement pipe, completely grout the voids between the outside of the encasement pipe and the inner wall of the bore or tunnel throughout the length of the pipe. If directed by the City Engineer, the joints shall be welded to prevent the joints from slipping with respect to each other.

3.7 SUPPORT OF PIPES ACROSS BORE OR TUNNEL PITS

A. After completion of the bore or tunnel and installation of the carrier pipe with the bore or tunnel, remove all loose earth and debris from the pit down to undisturbed earth. Pour a continuous 2,000 psi concrete or cement stabilized sand support under the carrier pipe from the edge of the bore or tunnel to the first joint in the trench past the end of the pit. The concrete support shall be brought up to the horizontal centerline of the pipe.

3.8 CARRIER PIPE

A. Carrier pipe may be pushed or pulled through the completed encasement pipe. Casing spacers by Cascade Waterworks or pre-approved equivalent should be placed on the carrier pipe to insure approximate centering within the encasement pipe and to prevent damage during installation. Care must be exercised in order to avoid metal-to-metal contact. The ends of the encasement pipe will be sealed with rubber seals and stainless steel bands. In order to avoid the transfer of earth and live loads to the carrier pipe, the space between the carrier pipe and encasement pipes shall not be filled completely.

B. All carrier pipe installed within a casing shall be restrained. The restrained section shall extend at least five feet (5') beyond both ends of the casing pipe. Lock joint pipe, retainer glands, or restrainer gaskets may be used for this application.

C. When ductile iron pipe is used for the carrier pipe, all ductile iron pipe shall be poly-wrapped per the specifications.

3.9 SPOILS

A. Spoil locations shall be pre-approved by the engineering inspector. When no suitable location for spoil can be found on site, the contractor shall be required to haul and dispose of this material at no extra cost. Where spoils are to be placed on parking areas (asphalt or concrete), sidewalks, or other paved surfaces, the spoils shall be placed on a barrier to prevent the soil from embedding into the paved surface.

END OF SECTION

SECTION 32 92 13

HYDRO-MULCH SEEDING

(Sentences and/or paragraphs that are double underlined indicate revisions that were made from the 2009 specification.)

PART 1 - GENERAL

1.1 DESCRIPTION

A. The work covered by this section consists of furnishing all plant, labor, materials, equipment, supplies, supervision and tools and performing all work necessary to top soiling, smoothing, seeding, fertilizing, watering, maintenance and cleanups of side slopes, all in accordance with these specifications.

B. The hydro-mulch seeding operations, together with all necessary related work, shall conform to the requirements specified in this section. The area(s) to be hydro-mulch seeded shall be as shown on the construction drawings.

1.2 MEASUREMENT AND PAYMENT

A. The unit of measurement for all work performed and materials furnished, as described herein, will be the acre or per station as indicated in the bid documents. Measurement shall be done upon completion of the work performed within the limits shown on the drawings and as described herein. The area measured for payment will be computed to the nearest 1/10-acre or station.

B. Payment for hydro-mulch seeding will be made at the contract unit price per acre or per station and includes topsoil (when specified), smoothing, mulch, seed fertilizer, watering, maintenance and clean-up. Additional payment shall not be made for those areas that are replanted.

PART 2 – PRODUCTS

2.1 MATERIALS

A. All seed must meet the requirements of the U.S. Department of Agriculture Rules & Regulations as set forth in the Federal Seed Act and the Texas Seed Law.

B. Type of seed, purity and germination requirements, rate of application and planting dates are as follows:

TABLE 1
Application
Rate-Pounds

TYPE/COMBINATION	PER ACRE	PLANTING DATE
Hulled Common Bermuda Grass 98/88 **and**,	40	Jan. 1 to Apr. 15
Unhulled Common Bermuda Grass 98/88 **and**,	40	
Annual Rye Grass, including Gulf	50	

TYPE/COMBINATION	PER ACRE	PLANTING DATE
Hulled Common Bermuda Grass 98/88	40	Apr. 15 to Oct. 1
Hulled Common Bermuda Grass 98/88 **and**, Unhulled Common Bermuda Grass 98/88	40 40	Oct. 1 to Jan. 1

C. Fertilizer shall be water soluble with an analysis of 10 percent nitrogen, 20 percent phosphoric acid and 10 percent potash. Rate of application shall be 500 pounds per acre, except during the period of April 15 through September 1, when the rate shall be reduced to 400 pounds per acre. The fertilizer shall be delivered to the site in bags or other convenient containers, each fully labeled, conforming to the applicable State Fertilizer Laws and bearing the name and warranty of the producer.

D. Mulch shall be virgin wood cellulose fiber made from whole wood chips. Within the fiber mulch material, at least 20 percent of the fibers will be 10.7 mm in length and 0.27 mm in diameter. Rate of application shall be 2000 pounds per acre. Soil stabilizers such as Terra Type III (or pre-approved equal) shall be applied at a rate of 40 pounds per acre on side slopes and Terra Tack I (or pre-approved equal) shall be applied at a rate of 40 pounds per acre on flatter portions.

E. Wood cellulose fiber mulch, for use in the grass seed and fertilizer, shall be processed in such a manner that it will not contain germination or growth inhibiting factors. It shall be dyed an appropriate color to allow visual metering of its application. The wood cellulose fibers shall have the property of becoming evenly dispersed and suspended when agitated in water. When sprayed uniformly on the surface of the soil, the fibers shall form a blotter-like ground cover, which readily absorbs water and allows infiltration to the underlying soil. Weight specifications from suppliers for all applications shall refer only to the underlying soil. Weight specifications from suppliers, shall refer only to the air dry weight of the fiber. The mulch material shall be supplied in packages having a gross weight not in excess of 100 pounds and must be marked by the manufacturer to show the dry weight content. Suppliers shall be prepared to certify that laboratory and field testing of their product has been accomplished and that it meets all of the foregoing requirements.

F. Water shall be free from oil, acid, alkali, salt and other substances harmful to the growth of grass. The water source shall be subject to approval, prior to use.

PART 3 – EXECUTION

3.1 CONSTRUCTION METHODS

A. EXECUTION: Immediately after the finished grade has been approved, begin hydro-mulching operations to reduce erosion and excessive weed growth.

Hydraulic equipment used for the application of fertilizer, seed and slurry of prepared wood fiber mulch shall have a built-in agitation system with an operating capacity sufficient to agitate, suspend and homogeneously mix a slurry containing up to forty (40) pounds of fiber plus a combined total of 70 pounds of fertilizer solids for each 100 gallons

of water. The slurry distribution lines shall be large enough to prevent stoppage. The discharge line shall be equipped with a set of hydraulic spray nozzles which provide even distribution of the slurry on the area to be seeded. The slurry tank shall have a minimum capacity of 800 gallons and shall be mounted on a traveling unit, which may either be self-propelled or drawn with a separate unit which will place the slurry tank and spray nozzles within sufficient proximity to the areas to be seeded, so as to provide uniform distribution without waste. The Engineer may authorize equipment with a smaller tank capacity, provided the equipment has the necessary agitation system and sufficient pump capacity to spray the slurry in a uniform coat.

Care shall be taken that the slurry preparation takes place on the site of the work. The slurry preparation should begin by adding water to the tank when the engine is at half throttle. When the water level has reached the height of the agitator shaft, good re-circulation shall be established and seed shall be added. Fertilizer shall then be added, followed by wood pulp mulch. The wood pulp mulch shall only be added to the mixture after the seed and when the tank is at least one-third filled with water. The engine throttle shall be opened to full speed when the tank is half filled with water. All the wood pulp mulch shall be added by the time the tank is two-thirds to three-fourths full. Spraying shall commence immediately when the tank is full. The operator shall spray the area with a uniform visible coat, by using the green color of the wood pulp as a guide.

B. APPLICATION: The contractor shall obtain approval of hydro-mulch area preparation from the Engineer prior to application.

Operators of hydro-mulching equipment shall be thoroughly experienced in this type of application. Apply the specified slurry mix in a motion to form a uniform mat at the specified rate. Operators shall keep the hydro-mulch within the areas designated and keep from contact with other plant material. Immediately after application, thoroughly wash off any plant material, planting areas or paved areas not intended to receive slurry mix.

Keep all paved and planting areas clean during maintenance operations. Contractor shall keep hydro-mulching within the areas designated and keep from contact with other plant material. If in the opinion of the Engineer, unplanted skips and areas are noted after hydro-mulching, the contractor shall be required to seed the unplanted areas with the grasses that were to have been planted at no additional cost to owner.

C. CONTRACTOR'S MAINTENANCE & GUARANTEE PERIOD: The hydro-mulch seeding shall be adequately watered until established. Any areas damaged by erosion or areas that do not have an acceptable turfing shall be redone to the satisfaction of the Engineer. Maintenance of grass areas shall be for 60 days after the completion of the project and shall consist of watering, weeding, repair of all erosion and reseeding, as necessary to establish a uniform stand of the specified grasses. Contractor shall guarantee growth and coverage of hydro-mulch planting under this contract to the effect that a minimum of 95% of the area planted will be covered with the specified planting after 60 days.

The Contractor shall be responsible for one (1) mowing every two weeks between the months of April to October. The Contractor shall also be responsible for one (1) mowing every three (3) weeks between the months of November to March. In addition, the Contractor shall water the entire sodded and hydro-mulched areas to a saturated depth of one (1) inch at least once a week between the months of April to September and at least once a month between the months of October to March.

The Contractor shall make a second application of specified hydromulch planting those bare areas not meeting specified coverage as determined by the Engineer. Such replanting is to be performed within 60 days of initial application and upon notification by the Engineer to replant.

The Contractor shall apply top dress fertilizer (delayed action), at the rate of 10 pounds per 1000 square feet at 25 days after hydro-mulching of all new lawn areas.

Top dress fertilizer shall be 16-6-8.

Prior to final inspection, the Contractor shall mow the entire right-of-way within the project limits, including weeding around existing structures.

END OF SECTION

SECTION 32 92 19

SEEDING FOR EROSION CONTROL

PART 1 - GENERAL

1.1 DESCRIPTION

A. Seeding shall consist of preparing ground, providing for sowing of seeds, mulching with straw, hay or cellulose fiber and other management practices along and across such areas as are designated on the plans and in accordance with these specifications. Note that a bid item for “SEEDING” does not constitute the requirement for fertilizer, mulch, and/or mesh unless the additional requirements are stated on the plans or special conditions.

1.2 MEASUREMENT AND PAYMENT

A. FERTILIZING: Measure by the acre or as indicated in the proposal. Payment for work under this item will be made at the contract price bid for "Fertilizing for Erosion Control", which price is full compensation for all fertilizer, equipment, materials and labor necessary for fertilizing.

B. SEEDING: Measure by the acre or as indicated in the proposal. Payment for work under this item will be made at the contract price bid for "Seeding for Erosion Control", which price is full compensation for all seeding, watering, equipment, materials and labor necessary for seeding.

C. STRAW MULCH SEEDING: Measure by the square yard or as indicated in the proposal. Payment for work under this item to be made at the contract price for "Straw Mulch Seeding", which price to be full compensation for all fertilizer, seed, straw mulch, equipment, watering, materials and labor necessary for fertilizing and seeding.

D. FIBER MAT SEEDING: Measure by the square yard or as indicated in the proposal. Payment for work under this item to be made at the contract price for "Fiber Mat Seeding", which price to be full compensation for all fertilizer, seed, fiber mat, watering, equipment, materials and labor necessary for fertilizing and seeding.

E. PAPER MESH SEEDING: Measure by the square yard or as indicated in the proposal. Payment for work under this item is to be made at the contract price for "Paper Mesh Seeding", which price to be full compensation for all fertilizer, seed, paper mesh, watering, equipment, materials and labor necessary for fertilizing and seeding.

1.3 SUBMITTALS

A. Source of seeds

B. Seed Mix

C. Fertilizer

D. Manufacturer’s data on Mulch Material

E. Manufacturer’s data on Fiber Mat

F. Manufacturer’s data on Paper Mesh

PART 2 – PRODUCTS

2.1 MATERIALS

A. GRASS SEED: All seed must meet the requirements of the U.S. Department of Agriculture as set forth in the Rules and Regulations of the Federal Seed Act and the Texas Seed Law, including the labeling requirements for showing pure live seed, (PLS=purity x germination), name and type of seed. Seed furnished shall be of the previous season's crop and the date of analysis shown on each bag shall be within nine months of the time of use on the project. Each variety of seed shall be furnished and delivered in separate bags or containers. A sample of each variety of seed shall be furnished and delivered when directed by the Engineer. Seed which has been become wet, moldy or otherwise damaged in transit or storage will not be accepted. The amount of seed planted per acre, the type and the planting date shall be as indicated in the table below.

TABLE I

Type	Rate of Application Planting Type in Pounds per Acre	Planting Date
Unhulled Bermuda Grass	20	Jan. 1 to Apr. 1
Hulled Bermuda Grass	12	Apr. 1 to Oct. 1
Mix Bermuda & Rye in the following Proportions:		
Unhulled Bermuda Grass	12	
Rye Grass	50	Oct. 1 to Jan. 1

B. FERTILIZER: Use pellet or granular fertilizer with analysis of 16 percent nitrogen, 20 percent phosphoric acid and zero percent potash (or 10-10-5), unless otherwise required. The container labels shall show the analysis. Powdered or caked fertilizers shall not be permitted. Unless otherwise indicated on the plans, fertilizer shall be applied uniformly at an average rate of 400 pounds per acre.

C. STRAW MULCH: Straw mulch shall be oat, wheat, or rice straw. Hay mulch shall be prairie grass, bermuda grass, oat, wheat or rice stems or other hay as pre-approved by the Engineer. Do not use straw containing Johnson grass or other noxious weeds and foreign materials. It shall be kept in a dry condition and shall not be molded or rotted. 164.5 Fiber Mat. Fiber mat to consist of machine produced mat of wood fibers, with consistent thickness throughout blanket. Use blanket with top side of netted twisted Kraft paper having high wet strength, or biodegradable extruded plastic mesh. Use blanket with a weight from 0.7 pounds per square yard to 1.0 pound per square yard.

D. PAPER MESH: Use paper mesh consisting of Knitted construction of yarn with uniform openings interwoven with strips of biodegradable paper, furnished in rolls for suitable protection for outdoor storage. Use paper mesh of weight from 0.2 pounds per square yard to approximately 0.5 pounds per square yard.

PART 3 – EXECUTION

3.1 CONSTRUCTION METHODS

A. GENERAL: Fertilizing & Seeding. After areas to receive fertilizing and seeding has been completed to the lines, grades and sections shown on the plans, apply fertilizer at the uniform average rate of 400 pounds per acre. Thoroughly mix upper 3 inches of top soil with fertilizer until a uniform mixture of fertilizer and top soil is obtained. Sprinkle areas to be seeded with water, using fine spray to avoid washing or erosion of soil. Broadcast seed with sowing equipment at the rate specified above, using care to obtain uniform distribution. After broadcasting, lightly rake seeds into soil to a depth not to exceed 1/2 inch. Complete seeding by rolling with roller developing 15 to 25 pounds per inch of tread. Keep seeded areas moist for a period of 10 days immediately following placement. When watering seeded areas, use fine spray to prevent erosion of seeds or soil. Reseed any areas damaged by erosion.

B. STRAW MULCH SOIL RETENTION BLANKET:

1. Fertilizing & Seeding: After ditch or slope has been completed to lines, grades and cross-sections shown on the plans, apply fertilizer and seed in accordance with the above. When seed and fertilizer are to be distributed as water slurry, mixture is to be applied within 30 minutes after all components are placed in the equipment.

2. Mulch Application: Immediately upon completion of planting of seed and fertilizing, spray straw mulch uniformly over the area at the rate of 1 1/2 to 2 tons of hay or 2 1/2 tons of straw per acre. Mulching machine shall inject asphaltic material into straw uniformly as it leaves the equipment at the rate of 0.05 to 0.10 gallons of asphalt per square yard of mulched area. When watering seeded areas, use fine spray to prevent erosion of seeds or soil. Reseed any areas damaged by erosion for any reason. The mulching operation shall immediately follow seeding and fertilizing as a continuous operation.

C. FIBER MAT OR PAPER MESH SOIL RETENTION BLANKET**:**

1. Fertilizing and seeding shall be in accordance with the above.

2. Fiber Mat or Paper Mesh Installation: Place fiber mat or paper mesh within 24 hours after seeding operations have been completed. Prior to placing, clear the area to be covered of all rocks or clods over 1 1/2 inches in diameter and all sticks or other foreign material which will prevent close contact of the blanket with the soil. Area shall be smooth and free of ruts or other depressions. If as a result of a rain, prepared seed bed becomes crusted or eroded, or if eroded places, ruts or depressions exist for any reason, rework soil until smooth and reseed such areas. After area has been properly prepared, lay fiber mat or paper mesh flat, smooth and loosely without stretching or crimping material. Apply materials with lengths running parallel to the flow of water. When more than one width is required, butt or overlap edges as required by the manufacturer. Hold the material in place by means of a wire staple driven into the soil at an angle to the surface. Staple material along each edge and in a grid pattern with minimum 3 foot centers each way. In ditches and on slopes, provided additional stapling as recommended by the manufacturer.

D. CONTRACTOR MAINTENANCE & GUARANTEE PERIOD: Maintenance of seeded areas shall be 60 days after successful completion of punch list items and shall consist of water and weeding, repair of all erosion and any reseeding as necessary to establish a uniform stand of the specified grasses. Contractor shall guarantee growth and coverage of seeding under this contract to the effect that a minimum of 95% of the area planted will be

covered with the specified grass after 60 days with no bare spots greater than 10 square feet. The Contractor shall be responsible for one (1) mowing every 2 weeks between the months of April to October. The Contractor shall also be responsible for one (1) mowing every three (3) weeks between the months of November to March. In addition, the Contractor shall water the entire sodded and hydro-mulched areas to a saturated depth of one (1) inch at least once a week between the months of April to September and at least once a month between the months of October to March. Contractor shall make a second application of seeding to bare areas not meeting specified coverage as determined by the Engineer. Such replanting is to be performed within 90 days of initial application and immediately upon notification by the Engineer to replant.

END OF SECTION

SECTION 32 92 23

SODDING FOR EROSION CONTROL (BLOCK SODDING)

PART 1 – GENERAL

1.1 DESCRIPTION

A. Sodding for erosion control shall consist of providing and planting Bermuda grass, San Augustine grass, or other acceptable sod along or across such areas as are designated on the drawings and in accordance with the specification requirements herein outlined.

1.2 MEASUREMENT AND PAYMENT

A. Work and acceptable material for block sodding will be measured by the square yard, complete and in place.

B. Work performed and material furnished under "Measurement" will be paid for at the unit price bid for "Block Sodding", which price shall be full compensation for furnishing materials, preparation of ground for planting, planting, raking, fertilizing, watering, sprinkling, maintenance, and for labor, tools, equipment and incidentals necessary to complete the work.

1.3 SUBMITTALS

A. Contractor shall submit material data on the source of the sod including the date the sod was cut.

PART 2 – PRODUCTS

2.1 MATERIALS

A. The sod shall consist of live, growing Bermuda grass, San Augustine grass, or other acceptable sod, (ninety-five percent pure), secured from sources where the soil is fertile and has been fumigated. The sod shall have a healthy virile root system of dense, thickly matted roots throughout. The sod shall be cut from the field so that there is a minimum of one-half inch of soil on the roots of the sod, and so that no roots show on the bottom of the soil. Sod shall be dense, with the grass having been mowed to 1 inch height before lifting from field. Sod shall be in a vigorous condition, dark green in color, free of disease and harmful insects. The contractor shall not use sod from areas where the grass is thinned out, nor where the grass roots have been dried out by exposure to the air and sun to such an extent as to damage its ability to grow when transplanted. The sod shall be free from obnoxious weeds or other grasses and shall not contain any matter deleterious to its growth or which might affect its subsistence or hardiness when transplanted. Unless the area has been closely pastured, it shall be closely mowed and raked to remove all weeds and long-standing stems.

B. Care shall be taken at all times to retain the native soil on the roots of the sod during the process of excavation, hauling and planting. Sod material shall be kept moist from the time it is dug, until planted. When so directed by the Engineer, the sod existing at the source shall be watered to the extent required, prior to excavating. Do not stack sod for more than 36 hours between the time of cutting and the time of installation. The Engineer reserves the right to reject any sod deemed unacceptable for installation.

C. All plantings shall be done between the average date of the last freeze in the spring and six weeks prior to the average date for the first freeze in the fall, according to the U.S. Weather Bureau.

D. Fertilizer shall conform to the requirements of the Item, "Fertilizer" and shall be applied at the rate of 480-pounds per acre.

PART 3 – EXECUTION

3.1 CONSTRUCTION METHODS

A. Immediately after the finished grade has been approved, begin sodding operations to reduce excessive weed growth. If the sod bed is dry, immediately prior to sod installation, dampen the surface with a fine mist of water.

B. Grass shall be turf sod, cut into 16 inch by 24 inch strips.

C. All areas to be sodded shall be raked to true lines, free from all unsightly variations, bumps ridges or depressions. All sticks, stones, roots or other objectionable material which might interfere with the formation of a finely pulverized seed bed, shall be removed from the soil.

D. Lay sod so that adjacent strips butt tightly, with no spaces between strips. Lay sod on mounds and slopes, with strips parallel to contours. Stagger joints. Sodded areas shall be flush with adjoining seeded areas. All sod shall, of course, be laid green side up. Tamp and roll the sod thoroughly to make contact with the sod bed, or as directed by the Engineer.

E. Peg sod on slopes three to one or steeper with pegs driven through sod into soil, until pegs are flush with the turf. Space pegs 18 inches on center. Pegs to be 1 inch square, 6 inches long or, 6 inch lengths of lath. Commercial fertilizer as outlined in the Item, "Fertilizer" shall be applied to the entire sodded area at the prescribed rates, immediately following laying of the sod. Immediately after fertilizing, water the entire area to a saturated depth of 2-inches.

F. Immediately after installation of the sod, remove sod clumps on soil, wash off any plant materials and pavements not to have sod. Edges along curbs and drives, walkways, etc., shall be carefully trimmed and maintained until accepted.

3.2 CONTRACTOR'S MAINTENANCE & GUARANTEE PERIOD

A. Maintenance of sodded areas shall be for 60 days after completion of the project and shall consist of watering, weeding, repair of all erosion and resodding as necessary to establish a uniform growth of the specified grass. Contractor shall guarantee growth and coverage of the sod planted under this contract to the effect that a minimum of 95% of the area planted will be covered with the specified planting after 60 days. Sod panels that are dead or dying shall be replaced.

B. The Contractor shall be responsible for one (1) mowing every two weeks between the months of April to October. The Contractor shall also be responsible for one (1) mowing every three (3) weeks between the months of November to March. In addition, the Contractor shall water the entire sodded and hydro-mulched areas to a saturated depth of one (1) inch at least once a week between the months of April to September and a least once a month between the months of October to March.

C. Contractor shall make a second planting to those bare areas not meeting specified planting as determined by the Engineer. Such replanting is to be performed within 90 days of initial application and upon notification by the Engineer to replant.

END OF SECTION

SECTION 33 05 01

POLYVINYLCHLORIDE PIPE AND FITTINGS

(Sentences and/or paragraphs that are double underlined indicate revisions that were made from the 2009 specification.)

PART 1 - GENERAL

1.1 DESCRIPTION

A. The work specified under this section includes the manufacture, construction and installation of Polyvinylchloride (PVC) pipe and fittings for Water Lines and for Gravity and Pressure Sanitary Sewers.

1.2 REFERENCES

The publications listed below form a part of this Specification to the extent referenced. The publications are referred to in the text by basic designation only.

AMERICAN SOCIETY FOR TESTING AND MATERIALS (ASTM)

ASTM D1784	Standard Specification for Rigid Poly (Vinyl Chloride) (PVC) Compounds and Chlorinated Poly (Vinyl Chloride) (CPVC) Compounds (Latest Edition)
ASTM F477	Standard Specification for Elastomeric Seals (Gaskets) for Joining Plastic Pipe (Latest Edition)
ASTM F 1483	Standard Specification for Oriented Poly (Vinyl Chloride), (PVCO) Pressure Pipe (Latest Edition)
ASTM C33	Standard Specification for Concrete Aggregates
ASTM C150	Standard Specification for Portland Cement
ASTM D1598	Standard Test Method for Time-to-Failure of Plastic Pipe Under Constant Internal Pressure
ASTM D1599	Standard Test Method for Resistance to Short-Time Hydraulic Failure Pressure of Plastic Pipe, Tubing, and Fittings
ASTM D2122	Standard Test Method for Determining Dimensions of Thermoplastic Pipe and Fittings
ASTM D2152	Standard Test Method for Adequacy of Fusion of Extruded Poly (Vinyl Chloride) (PVC) Pipe and Molded Fittings by Acetone Immersion
ASTM D2241	Standard Specification for Poly (Vinyl Chloride) (PVC) Pressure-Rated Pipe (SDR Series)
ASTM D2564	Standard Specification for Solvent Cements for Poly (Vinyl Chloride) (PVC) Plastic Piping Systems
ASTM F679	Standard Specification for Poly (Vinyl Chloride) (PVC) Large-Diameter Plastic Gravity Sewer Pipe and Fittings
ASTM D2672	Standard Specification for Joints for IPS PVC Pipe Using Solvent Cement

ASTM D3034	Standard Specification for Type PSM Poly (Vinyl Chloride) (PVC) Sewer Pipe and Fittings
ASTM D3212	Standard Specification for Joints for Drain and Sewer Plastic Pipes Using Flexible Elastomeric Seals
ASTM D3139	Standard Specification for Joints for Plastic Pressure Pipes Using Flexible Elastomeric Seals

AMERICAN WATER WORKS ASSOCIATION (AWWA)

AWWA C900	Polyvinyl Chloride (PVC) Pressure Pipe, 4-Inch Through 12- Inch for Water Distribution (Latest Edition)
AWWA C909	Molecularly Oriented Polyvinyl Chloride (PVCO) Pressure Pipe. 4-Inch Through 12-Inch for Water Distribution (Latest Edition)
AWWA C104	ANSI Standard for Cement-Mortar Lining for Ductile Iron Pipe and Fittings for Water
AWWA C105	ANSI Standard for Polyethylene Encasement for Ductile-Iron Pipe Systems
AWWA C111	ANSI Standard for Rubber-Gasket Joints for Ductile-Iron Pressure Pipe and Fittings
AWWA C116	Protective Fusion Bonded Epoxy Coatings for the Interior and Exterior Surfaces of Ductile-Iron and Gray-Iron Fittings for Water Supply Service
AWWA C153	Ductile Iron Compact Fittings, 3 in. through 24 in. and 54 in. through 64 in. for Water Service
AWWA C905	Polyvinyl Chloride (PVC) Pressure Pipe and Fabricated Fittings, 14 In.-48 In.

1.3 MEASUREMENT AND PAYMENT

A. Payment shall be made at the price bid per unit length per the specification SECTION 33 11 13.1 - WATER MAIN CONSTRUCTION or SECTION 33 31 13 - SANITARY SEWAGE SYSTEM.

1.4 SUBMITTALS

A. Submit manufacturer's data on pipe furnished, indicating compliance with the specifications regarding dimensions, thickness, weights, and materials.

B. Submit manufacturer's "Certificate of Compliance," stating that the materials furnished comply with this specification.

1.5 STORAGE AND HANDLING

A. <u>UNLOADING - COLD WEATHER HANDLING</u>

As the temperature approaches and drops below freezing extra care should be used in handling during cold weather. Pipe at the bottom of a stack may become out-of-round due to the weight of material above it. Allow the pipe to recover to full initial roundness before installation. Pipe may be unloaded by hand, either by passing over the side or off the truck

end. Sliding one length on another is permissible in unloading pipe, but lengths in the bottom layer shall be lifted off of the rough surface of the truck body to avoid abrasion. Compact shipping units (palletized bundles in a wood frame) may be unloaded by conventional fork lifts.

B. STOCKPILES

Store pipe on a flat surface so as to support the barrel evenly with bell ends overhanging. Store random lengths separately where they will be readily available. Individual lengths of pipe should be stacked in piles no higher than 5 feet. Pipe shall be protected during long exposures (over 3 months) to sunlight. Do not use clear plastic sheets. Provide for air circulation under sheet.

C. STORING RUBBER RINGS

Store all rubber rings at a central point and distribute them as needed. Keep them clean, away from oil, grease, excessive heat and electric motors which produce ozone. If rubber rings are not to be used immediately, store them in their cartons, as shipped, in a cool dark place out of the direct rays of the sun.

PART 2 – PRODUCTS

2.1 MATERIALS

A. WATER LINES

1. Pipe

a. Blue colored Polyvinyl chloride (PVC) pressure pipe, six inch (6”) through twelve inch (12”) , shall conform to the current AWWA – C900 DR 14, be UL listed, be approved by the Texas State Board of Insurance and the National Sanitation Foundation. The outside diameter shall be identical to ductile-iron pipe (CIOD Standard, Table 2, AWWA – C900). All pipe shall be new and have the AWWA designation, pressure class, DR pressure rating and size of pipe stamped on the outside of each joint (follow requirements of C900 2.5.2 Markings). All piping shall be new. Partial pieces from other projects shall not be approved for installation. Metal detector tape shall be installed above all PVC pipe at an elevation of 2 feet below natural ground.

b. Blue colored DR 14 (meeting current AWWA C-905 standards) for pipe sizes greater than 12 inches.

c. PVC Pressure Pipe shall be designed and tested in accordance with ASTM D1598, D1599, and D2152.

d. Fittings for PVC water pipe shall be ductile-iron, and shall conform to AWWA C153, unless otherwise specified.

Fitting joints shall be mechanical joints. Bolts and nuts for mechanical joints, or flanged ends will be of a high strength corrosion resistant low-alloy steel and shall conform to AWWA C111. Flange bolts and nuts for above ground installation shall conform to Appendix A of AWWA C115. Flange bolts and nuts for below ground installation shall be 316 stainless steel. All fittings shall be epoxy coated and lined unless stainless steel is used.

Where joints are to be restrained, use mega-lug type fitting for pipe six (6”) inches in size and larger. Mega-lug type mechanical restraints with less than 6 contact points will not be allowed for six (6”) inch pipe sizes and larger.

Polyethylene wrap or encasement of metal fittings shall conform to AWWA C105. Joint tape shall be self sticking PVC or 8-mil-thick polyethylene.

e. Joints: PVC water pipe shall be furnished with an elastomeric gasket at each joint and an integral thickened bell as part of each joint. Pipe and fittings must be assembled with a non-toxic lubricant. Provisions must be made at each joint for expansion and contraction. Refer to ASTM F477, D3139 and D3212.

B. GRAVITY SANITARY SEWER

1. Pipe

Flexible pipe and fittings shall be unplasticized polyvinyl chloride gravity sewer pipe shall be green in color, made from clean, virgin, NSF approved Class 12454-B PVC conforming to ASTM D1784. All pipe shall be new and have the ASTM designation, SDR, pressure rating and size stamped on the outside of each joint. All markings shall follow requirements of ASTM D3034.

Polyvinyl chloride (PVC) gravity pipe and fittings in sizes six inch (6") through twelve inch (12") shall conform to ASTM D3034 and be UL listed and approved by the National Sanitation Foundation. Pipe and fittings shall be SDR-26. Eighteen inch (18") pipe and fittings shall be SDR-26 and conform to ASTM F-679, be UL listed and approved by the National Sanitation Foundation.

C. SEWER FORCE MAIN AND PRESSURE PIPE

1. Pipe

a. Polyvinyl chloride (PVC) pressure pipe, four (4) inch through eight (8) inch, shall be white in color and shall conform to the current ASTM D2241, AWWA – C900, or AWWA C909 standard, be UL listed, be approved by the Texas State Board of Insurance and the National Sanitation Foundation. PVC pipe pressure class shall be equal to or greater than twice the maximum calculated pressure of the force main.

b. Polyvinyl chloride (PVC) pressure pipe shall be SDR-21 Class 200 and conform to the ASTM D2241 standard, be UL listed and approved by the National Sanitation Foundation, and shall be white in color. The outside diameter shall be identical to steel pipe.

c. PVC Pressure Pipe shall be designed and tested in accordance with ASTM D1598, D1599, and D2152.

d. Fittings for PVC pressure pipe shall be ductile-iron, and shall conform to AWWA C153, unless otherwise specified. Fitting joints shall be mechanical joints. Bolts and nuts for mechanical joints, or flanged ends will be of a high strength corrosion resistant low-alloy steel and shall conform to AWWA C111. Flange bolts and nuts for above ground installation shall conform to Appendix A of AWWA C115. Flange bolts and nuts for below ground installation shall be 316 stainless steel. All fittings shall be epoxy coated and lined unless stainless steel is used. Polyethylene wrap or encasement of metal fittings shall conform to

AWWA C105. Joint tape shall be self sticking PVC or 10-mil-thick polyethylene.

Where joints are to be restrained, use mega-lug type fitting.

e. Joints: PVC water pipe shall be furnished with an elastomeric gasket at each joint and an integral thickened bell as part of each joint. Pipe and fittings must be assembled with a non-toxic lubricant. Provisions must be made at each joint for expansion and contraction. Refer to ASTM F477, D3139 and D3212.

2.2 TESTING REQUIREMENTS

See: SECTION 33 01 30 - TESTING OF GRAVITY SEWER SYSTEMS
SECTION 33 13 10 - HYDROSTATIC TESTING (Used for Waterlines & Sanitary Sewer Force Mains)
SECTION 33 13 00 - DISINFECTION OF WATERLINES

PART 3 – EXECUTION

3.1 TRENCHING

A. See Standard Details.

3.2 JOINT ASSEMBLY

A. Push-on joints shall be assembled as follows:

1. Thoroughly clean the groove and bell and insert the gasket, making sure that it faces the proper direction and that it is correctly seated.
2. Dirt or foreign material shall be cleaned from the spigot end to a point one inch (1") beyond the reference mark. A joint lubricant shall be used and applicable recommendations of the manufacturer shall be followed.
3. Be sure that the spigot end is beveled, as square or sharp edges may damage or dislodge the gasket and cause a leak. Push the spigot end into the bell of the pipe while keeping the joint straight. Brace the bell while the beveled end is pushed under the ring, so that previously completed joints in the line will not be closed up. Make deflection after the joint is assembled.
4. Push the spigot end in until the reference mark on the spigot end is flush with the end of the bell. If excessive resistance to insertion of the beveled end is encountered or the reference mark does not reach the flush position, disassemble the joint, and check the position of the ring. If it is twisted or pushed out of its seat, clean the ring, bell and beveled end and repeat assembly. Be sure both lengths are in proper alignment. If the ring was not out of position, measure the distance between the reference mark and beveled end, and check it against correct values from the manufacturer. Relocate the reference mark if it is out of position.
5. Small pipe can be pushed into the bell end with a long bar. Large pipe requires additional power, such as a jack, lever puller, or backhoe. A timber header should be used between the pipe and jack or backhoe bucket to avoid damage to the pipe.
6. At times when pipe laying is not in progress, the open ends of pipe shall be closed by watertight plug or other means pre-approved by the Engineer. The plug shall remain

in place until the trench is pumped completely dry. Care must be taken to prevent pipe flotation should the trench fill with water.

B. Mechanical joints shall be assembled as follows:

1. Wipe clean the bell and spigot end. The spigot end, bell, and gasket should be washed with a soap solution to improve gasket seating.
2. Place the gland on the spigot end with the lip extension toward the spigot end, followed by the gasket with the narrow edge of the gasket toward the spigot end of the pipe.
3. Insert the pipe into the bell and press the gasket firmly and evenly into the gasket recess. Keep the joint straight during assembly. Make deflection after joint assembly but before tightening the bolts.
4. Push the gland toward the bell and center it around the pipe with the gland lip against the gasket.
5. Align bolt holes and insert bolts, with bolt heads behind the bell flange, and tighten opposite nuts to keep the gland square with the bell.
6. Tighten the nuts in accordance with manufacturer's recommendations.

C. When it is necessary to deflect pipe from a straight line in either the vertical or horizontal plane, or where long radius curves are permitted, the amount of deflection shall not exceed that shown in Table 1. Pipes greater than twelve-inches (12") in diameter shall not be deflected.

TABLE 1
Maximum Deflection Full Length Pipe
Push-on Type Joint

Pipe Diameter in.	Deflection Angle Deg.	Minimum Radius of Curve ft. *
6	2.5	230
8	1.9	300
12	1.3	450

* All curvature results from the bending of pipe lengths. There is no deflection at the joint.

D. Cutting and Beveling

1. A square cut is essential to insure proper assembly. Use either a tubing cutter or a miter box and carpenter's fine-toothed hand saw or hacksaw. (Do not use standard pipe cutters. The cutting wheel will crush or damage the pipe.)
2. Use a factory-finished beveled end as a guide to determine the angle and length of taper. The end may be beveled using a Pilot beveling tool which will cut the correct taper automatically or a thin steel, "cheese-grater" type of hand tool, Stanley "Sureform" No. 399.
3. With a pencil or crayon, locate the reference mark at the proper distance from the bevel end as indicated by the manufacturer.

3.3 POLYETHYLENE TUBE PROTECTION

A. All cast iron and ductile iron fittings shall be provided with 8 mil polyethylene tube protection. Completely cover all fittings and connections with polyethylene film held securely in place with joint tape or strapping according to the provisions of AWWA C105.

3.4 EMBEDMENT

A. Install embedment as shown on the Plans and in accordance with SECTION 31 23 33 - EXCAVATING, TRENCHING, AND BACKFILLING.

3.5 TAPPING WATER LINES

A. Where a tap occurs within a deflected section of pipe, utilize a fitting (ie: 8” x 1” tapped tee) in lieu of tapping the pipe.

B. The tapping sleeve specified will be the Smith-Blair 662 or the Ford FTSS_Stainless Steel Tapping Sleeve with Epoxy Coated Flange for pipe sizes 6"-24".

3.6 GRAVITY SANITARY SEWER DEFLECTION TEST

A. The sewer line shall be tested for deflection in accordance with SECTION 33 01 30 - TESTING FOR SANITARY SEWAGE GRAVITY SYSTEM.

END OF SECTION

SECTION 33 05 02

DUCTILE IRON PIPE

PART 1 - GENERAL

1.1 DESCRIPTION

A. The work specified under this section includes furnishing all labor, tools, equipment, materials, and supplies for the installation of Ductile Iron Pipe for Water Lines or Sanitary Sewers.

1.2 REFERENCES

The publications listed below form a part of this Specification to the extent referenced. The publications are referred to in the text by basic designation only.

AMERICAN SOCIETY FOR TESTING AND MATERIALS (ASTM)

ASTM A746	Standard Specifications for Ductile Iron Gravity Sewer Pipe (Latest Revision)

AMERICAN WATER WORKS ASSOCIATION (AWWA)

AWWA C104	Cement-Mortar Lining for Ductile Iron Pipe and Fittings for Water (Latest Edition)
AWWA C105	Polyethylene Encasement for Ductile Iron Pipe Systems (Latest Edition)
AWWA C111	Rubber-Gasket Joints for Ductile Iron Pressure Pipe and Fittings (Latest Edition)
AWWA C115	Flanged Ductile Iron Pipe with Threaded Flanges (Latest Edition)
AWWA C116	Protective Fusion Bonded Epoxy Coatings for the Interior and Exterior Surfaces of Ductile-Iron and Gray-Iron Fittings for Water Supply Service
AWWA C151	Ductile Iron Pipe, Centrifugally Cast, for Water or Other Liquids (Latest Edition)
AWWA C150	Thickness Design of Ductile Iron Pipe (Latest Edition)
AWWA C153	Ductile Iron Compact Fittings, 3 in. through 24 in. and 54 in. through 64 in. for Water Service
AWWA C600	Ductile Iron Water Mains (Latest Edition)

1.3 MEASUREMENT

A. Payment shall be made at the price bid per unit length per the specification SECTION 33 11 13.1 - WATER MAIN CONSTRUCTION or SECTION 33 31 13 - SANITARY SEWAGE SYSTEM.

1.4 SUBMITTALS

A. Submit manufacturer's data on pipe furnished, indicating compliance with the specifications regarding dimensions, thickness, weights, and materials.

B. Submit manufacturer's "Certificate of Compliance," stating that the materials furnished comply with this specification.

1.5 STORAGE AND HANDLING

A. Pipe to be shipped in accordance with the pipe manufacturer's recommendations and stored in a manner that the pipe is not damaged. The Contractor will replace damaged piping at no additional cost to the City.

B. Pipe shall not be stacked higher than manufacturer's recommendations. The bottom tier shall be kept off the ground on timbers, rails, or concrete. Pipe in tiers shall be alternated: bell, plain end; bell, plain end. At least two (2) rows of 4" x 4" timbers shall be placed between tiers and chocks affixed to each end in order to prevent movement.

C. Gaskets for mechanical joints to be stored shall be placed in a cool location out of direct sunlight. Gaskets shall not come in contact with petroleum products. Gaskets shall be used on a first-in, first-out basis.

D. Mechanical joint bolts shall be handled and stored in such a manner that will ensure proper use with respect to types and sizes.

PART 2 – PRODUCTS

2.1 MATERIALS

A. WATER LINES

1. Pipe

Ductile iron pressure pipe shall conform to the current AWWA C151 (ANSI A21.51) standard. All pipe shall be new, and shall have the AWWA or ASTM designation, pressure class and size of pipe stamped on the outside of each joint. Ductile iron pipe shall be approved by the Underwriter's Laboratory and shall be accepted by the State Fire Insurance Board for use in water distribution systems without penalty. Ductile iron pipe less than six (6") inches in diameter will not be allowed. Ductile iron thickness shall conform in all respects to the current AWWA C150 standard based on a minimum of 200 psi working pressure. A special design shall be provided for large diameters or deep embedments.

Flanged pipe shall conform to AWWA C115 and be based upon a minimum of 200 psi working pressure.

Foreign made pipe shall not be accepted.

2. Joints And Gaskets

All ductile iron pressure pipe shall be furnished with one of the following types of joints, and as described in the Proposal, or shown on the Plans.

Type Joint	Standard
Mechanical Joint	AWWA C111
Flanged Ends	AWWA C115

Flange gaskets shall be full faced and conform to Appendix A of AWWA C115.

3. Fittings

Fittings for ductile iron pipe shall be of cast iron, or ductile iron, and shall conform to AWWA C153, unless otherwise specified in the proposal, special specification, or on the plans.

Fitting joints shall be mechanical, flanged, or special internally locked joint with body thickness and radii of curvature conforming to AWWA C153.

All screwed flanges shall be ductile iron.

4. Bolts And Nuts

Bolts and nuts for mechanical joints shall be of a high strength corrosion resistant low alloy steel and conform to AWWA C111. Flange bolts and nuts for above ground installation shall conform to Appendix A of AWWA C115. Flange bolts and nuts for below ground installation shall be 316 stainless steel.

5. Polyethylene Encasement

Polyethylene encasement of 8 mils thickness shall conform to AWWA C105. Joint tape shall be self sticking PVC or polyethylene, 8 mils thick.

6. Restraint

See SECTION 03 30 01 - CONCRETE BLOCKING OR ANCHORAGE.

7. Coatings

Pipe exterior to be bituminous coated and in accordance with the requirements of AWWA C151 Section 4.3. Coating and Lining or epoxy coated in accordance with AWWA C116.

8. Lining

Unless otherwise noted, all pipe shall be cement-mortar lined inside with seal coat all in accordance with AWWA C104 or epoxy coated in accordance with AWWA C116.

B. GRAVITY SANITARY SEWER LINES

1. Pipe

a. Ductile iron gravity and pressure pipe shall conform to the current ASTM, A746, and AWWA C111 and C151 (ANSI A21.51) standard. All pipe shall be new, and shall have the AWWA or ASTM designation, pressure class and size of pipe stamped on the outside of each joint. Ductile iron pipe less than eight (8”) inches in diameter will not be allowed for sewer mains.

b. Ductile iron thickness shall conform in all respects to the current AWWA C150/C151 standard, based on a minimum of 200 psi working pressure.

c. Pipe to be shipped in accordance with the pipe manufacturer’s recommendations and stored in a manner that the pipe is not damaged. The Contractor will replace damaged piping at no additional cost to the City.

d. Flanged pipe shall conform to AWWA C115, and be based upon a minimum of 200 psi working pressure.

2. Joints And Gaskets

All ductile iron pressure pipe shall be furnished with one of the following types of joints, and as described in the Proposal or shown on the Plans. Flange gaskets shall be full faced, and conform to Appendix A of AWWA C115.

Type Joint	Standard
Mechanical Joint	AWWA C111
Flanged Ends	AWWA C115

a. All screwed flanges shall be ductile iron.

b. Gaskets for mechanical joints to be stored shall be placed in a cool location out of direct sunlight. Gaskets shall not come in contact with petroleum products. Gaskets shall be used on a first-in, first-out basis.

3. Fittings

a. Fittings for ductile iron pipe shall be of ductile iron, and shall conform to AWWA C153.

b. Fitting joints shall be mechanical, flanged, or special internally locked joint with body thickness and radii of curvature conforming to AWWA C153.

4. Bolts And Nuts

Bolts and nuts for mechanical joints shall be high-strength corrosion resistant low alloy steel, and conform to AWWA C111. Flange bolts and nuts for above ground installation shall conform to Appendix A of AWWA C115. Flange bolts and nuts shall be 316 stainless steel.

Mechanical joint bolts shall be handled and stored in such a manner that will ensure proper use with respect to types and sizes.

5. Polyethylene Encasement

Polyethylene encasement shall conform to AWWA C105. Joint tape shall be self-sticking PVC or polyethylene, 8 mils thick.

6. Coatings/ Linings

All pipe and fittings shall be bituminous or epoxy coated outside and inside, all in accordance with AWWA C104 or AWWA C116. Interior lining for ductile iron sewer pipe shall conform to manufacturer's recommendations. Minimum lining thickness shall be 40 mils, regardless of material recommended.

Other acceptable lining materials are "Protecto 401" Ceramic Epoxy by Vulcan Group or pre-approved equal.

C. FORCE MAIN

Force mains shall comply with of all requirements of SECTION 33 11 13.1 – WATERLINE MAIN CONSTRUCTION.

2.2 TESTING REQUIREMENTS

See: SECTION 33 11 13.1 - WATER MAIN CONSTRUCTION or SECTION 33 31 13 - SANITARY SEWAGE SYSTEM for testing requirements.

PART 3 – EXECUTION

3.1 TRENCHING

A. See Standard Details.

3.2 PIPE INSTALLATION

A. All pipe fittings, services, and other appurtenances shall be examined carefully for damage and other defects immediately before installation. Defective materials shall be marked and held for inspection by the Engineer, who may prescribe corrective repairs or reject the material. All rejected material must be removed from the project immediately at the sole expense of the Contractor.

B. All lumps, blisters, and excess coating shall be removed from the socket and plain end and the inside of the bell shall be wiped clean and dry and be free from dirt, sand, grit or any foreign material before the pipe is laid.

C. Foreign material shall be prevented from entering the pipe while it is being placed in the trench. During laying operations, no debris, tools, clothing, or other materials shall be placed in the pipe.

D. As each length of pipe is placed in the trench, the joint shall be assembled and the pipe brought to correct line and grade. The pipe shall be secured in place with pre-approved backfill material.

E. At times when pipe laying is not in progress, the open ends of pipe shall be closed by watertight plug, or other means pre-approved by the Engineer. The plug shall remain in place until the trench is pumped completely dry. Care must be taken to prevent pipe flotation should the trench fill with water.

3.3 MECHANICAL JOINT ASSEMBLY

A. Wipe clean the socket and plain end. The plain end, socket and gasket should be washed with a soap solution to improve gasket seating.

B. Place the gland on the plain end, with the lip extension toward the plain end, followed by the gasket, with the narrow edge of the gasket toward the plain end of the pipe.

C. Insert the pipe into the socket and press the gasket firmly and evenly into the gasket recess. Keep the joint straight during assembly. Make deflection after joint assembly, but before tightening the bolts.

D. Push the gland toward the bell, and center it around the pipe with the gland lip against the gasket.

E. Align bolt holes and insert bolts, with bolt heads behind the bell flange, and tighten opposite nuts to keep the gland square with the socket.

F. Tighten the nuts in accordance with the manufacturer’s recommendations.

G. When it is necessary to deflect pipe from a straight line in either the vertical or horizontal plane, or where long radius curves are permitted, the amount of deflection shall not exceed manufacturer's recommendations.

3.4 PIPE CUTTING

A. Cutting pipe for the insertion of valves, fittings, or closure pieces shall be done in a neat, workmanlike manner, without creating damage to the pipe or lining. Seal-coat bare surfaces and cut ends per manufacturer's recommendations.

B. Cut ends and rough edges shall be ground smooth.

3.5 POLYETHYLENE TUBE PROTECTION

A. GENERAL

1. All cast iron & ductile iron pipe and fittings shall be provided with polyethylene tube protection according to the provisions of AWWA C105. Completely cover all fittings and connections with polyethylene film held securely in place with joint tape or strapping. The polyethylene encasement shall prevent contact between the pipe and the surrounding backfill and bedding material.

2. Where polyethylene-wrapped pipe joints an adjacent pipe that is not wrapped, extend the polyethylene wrap to cover the adjacent pipe for a distance of at least two (2') feet. Secure the end with circumferential turns of tape.

3.6 EMBEDMENT

A. Install embedment as shown on the Plans and in accordance with SECTION 31 23 33, Excavating, Trenching, and Backfilling.

3.7 REACTION ANCHORAGE AND BLOCKING

A. The contractor shall install concrete blocking and retaining glands to all unlugged bell and spigot or all-bell tees, Y-branches, bends deflecting eleven and one-fourth degrees (11 ¼°) or more, and plugs which are subject to internal pressure in excess of 10 psi. to preclude separation of joints. See SECTION 03 30 01 - CONCRETE BLOCKING OR ANCHORAGE for additional details.

3.8 MINIMUM COVER

A. See SECTION 33 11 13.1 - WATER MAIN CONSTRUCTION or SECTION 33 31 13 - SANITARY SEWAGE SYSTEM for cover requirements.

END OF SECTION

SECTION 31 23 00

EXCAVATION AND EMBANKMENT

PART 1 - GENERAL

1.1 DESCRIPTION

A. This Section includes providing all labor, materials, tools, and equipment necessary for excavation and embankment construction to the lines, grades and cross sections indicated in the Drawings or as directed by the ENGINEER.

1.2 MEASUREMENT AND PAYMENT

A. This item will be measured by the cubic yard. Cubic yards will be measured by the difference between the surveyed original grades and the final grades. Measurements will include all authorized excavation below grade, which are not attributed to the Contractor's carelessness, in the opinion of the Engineer.

B. The prices bid shall be full compensation for furnishing all materials, tools, equipment, pre- and post-grade surveys and incidentals necessary to complete the work. Payment will not be made for borrow material that is not suitable to use in embankments. Payment for unauthorized work will not be made.

C. All work required for the disposal of waste, including haul, and for the salvage, utilization in the work and disposal of salvageable materials, will not be paid for directly but shall be considered a part of "Excavation and Embankment" and included in the unit price bid for this item. Payment will not be made for unauthorized work.

1.3 SUBMITTALS

A. All material to be imported to the site shall be sampled at its original location and tested for acceptability. This testing shall be provided by the contractor at no expense to the owner.

B. A list of all compaction equipment to be utilized shall be submitted for approval prior to equipment arriving on site.

PART 2 – PRODUCTS

2.1 MATERIALS

A. EXCAVATION

1. All excavation shall be unclassified excavation, and shall consist of excavation and disposal of all materials, of whatever character, encountered in the WORK.

B. EMBANKMENT

1. Material shall consist of soil native to the work site, with or without stone or conglomerate, of a suitable quality to secure a well bonded course. Imported material shall consist of soil hauled to the work site for use in embankment operations.

2. Material for embankment shall be free of vegetation, wood, organic material, trash, bricks, broken concrete, piping, rubble, or other objectionable material. Material sources shall be selected to eliminate the introduction of hazardous materials into the work site.

C. SELECT MATERIAL

1. Material shall have a Plasticity Index between 4 and 20 and meet all other requirements of this specification.

2.2 TESTING REQUIREMENTS

A. All embankment material placed shall be tested. Unless otherwise shown on the plans, material placed for the benefit of roadway construction shall be compacted as follows:

B. Structural areas (roadways, slabs, sidewalks, detention pond berms, and all areas within 5 feet of any of these) shall be compacted to 95% of the maximum dry density as determined by the Standard Procter Density Test (ASTM D698) at a moisture content between optimum and +4% wet of optimum moisture content.

C. Non-structural areas (as shown on plans) shall be compacted to 90% of the maximum dry density as computed by the Standard Procter Density Test (ASTM D698) at a moisture content between optimum and +4% wet of optimum moisture content.

D. Tests shall be taken at a minimum of one test per every 4000 square feet of embankment per every 12” of depth. Additional tests shall be conducted at the engineer’s request. All tests meeting these requirements shall be paid for by the owner. The cost of all tests failing these requirements shall be deducted from payment for this item.

PART 3 – EXECUTION

3.1 EXCAVATION

A. All project excavation shall conform to the requirements of this specification. The completed roadway shall conform to the established alignment, grades and cross sections.

B. Clearing and grubbing in excavation areas must be completed prior to beginning excavation operations.

C. Topsoil shall be removed and stockpiled for reuse on the proposed surface. Topsoil in excess of what may be used on the finished surface shall be removed from the site by the contractor at no additional charge. Topsoil shall be assumed to be 6” deep, but shall be excavated deep enough to remove all roots and other organic material. Contractor shall first check with City to determine if the City would like to stockpile the topsoil.

D. All suitable excavated materials shall be utilized, insofar as practicable, in constructing the required roadway sections or in uniformly widening embankments, flattening slopes, etc., as directed by the Engineer. Unsuitable roadway excavation and excavation in excess of that needed for construction shall be known as "Waste" and shall become the property of the Contractor to be disposed of at a location approved by the Engineer.

E. If “Waste” material is to be placed on property owned by a third party, the City will need a letter from the third party stating acceptance of such fill. Fill will not be allowed in 100-year floodplain without approved permits.

F. Waste areas shall be uniformly graded to drain, with the outer limits feathered to blend with the existing ground. Waste areas shall be seeded, capped with suitable material, or otherwise protected from long-term erosion.

G. During construction, the roadbed and ditches shall be maintained in a condition to insure proper drainage at all times. Ditches and channels shall be constructed and maintained to avoid damage to the roadway section.

H. Gravel or base material on all existing streets shall be salvaged and used to tie-in new construction with existing unpaved streets and gravel and flexible pavement driveways. Driveways will be adjusted to provide smooth connections to new construction and shall be restored to a condition equal to or better than that existing before work began. All salvageable asphalt, gravel or rock base material not used in the work shall remain the property of the city. Such unused materials, as designated by the Engineer, shall be hauled to the city stockpile or to other stockpile locations designated by the Engineer and closer to the project than the site above.

3.2 EMBANKMENT

A. Prior to placing any embankment, all Clearing and Grubbing operations shall have been completed on the excavation sources and areas over which embankment is to be placed.

B. Stump holes or other small excavations in the limits of the embankments shall be backfilled with suitable material and thoroughly compacted by approved methods before commencing embankment construction. The surface of the ground, including plowed loosened ground, or surface roughened by erosion or otherwise, shall be restored to approximately its original grade by blading or other methods. Where indicated on Plans or required by the Engineer, the ground surface thus prepared shall be compacted by sprinkling and rolling.

C. Unless otherwise indicated on the Plans the surface of all unpaved areas, other than rock, which are to receive embankment shall be loosened by scarifying or plowing to a depth of not less than four (4) inches. The loosened material shall be re-compacted with the new embankment as hereinafter specified.

D. Where indicated on Plans or directed by the Engineer, the surface of hillsides to receive embankment shall be loosened by scarifying or plowing to a depth of not less than four (4) inches, or cut into steps before embankment materials are placed. The embankment shall then be placed in layers, as hereinafter specified, beginning at the low side in part width layers and increasing the widths as the embankment is raised. The material which has been loosened shall be re-compacted simultaneously with the embankment material placed at the same elevation.

E. Layers of embankment may be formed by utilizing equipment which will spread the material as it is dumped, or they may be formed by being spread by blading from piles or windrows dumped from excavating or hauling equipment in such amounts that material is evenly distributed.

F. No material placed in the embankment by dumping in a pile or windrow shall be incorporated in a layer in that position. All such piles or windrows shall be moved by blading or similar methods. Clods or lumps of material shall be broken and the embankment material mixed by blading, harrowing, disking, or similar methods.

G. Water required for sprinkling to bring the material to the moisture content necessary for maximum compaction shall be evenly applied. It shall be the responsibility of the Contractor to secure uniform moisture content throughout the layer by such methods as may be necessary. When water is required to achieve the required moisture content, the water must be from a source which does not contain any hazardous materials. Water removed from natural sources (ponds, lakes, rivers...) shall not impact any endangered species. Potable water sources shall be metered and paid by the contractor.

H. Where embankments are to be placed adjacent to or over existing roadbeds, the roadbed slopes shall be plowed or scarified to a depth of not less than six (6) inches and the embankment built up in successive layers, as hereinafter specified, to the level of the old roadbed before its height is increased. Then, if directed, the top of the old roadbed shall be scarified and re-compacted with the next layers of the new embankment. The total depth of the scarified and added material shall not exceed the permissible depth of layer.

I. Trees, stumps, roots, vegetation, or other unsuitable materials shall not be placed in embankment.

J. Except as otherwise required by the Plans, all embankment shall be constructed in layers approximately parallel to the finished grade of the roadbed, unless otherwise specified, each layer shall be so constructed as to provide a uniform slope of 1/4 inch per foot from the center line of the roadbed to the outside. Super elevated curves will require that each layer shall be constructed to conform to the super elevation required by the governing standard.

K. Embankments shall be constructed to the grade established by the Engineer and completed embankments shall correspond to the general shape of the typical sections shown on the Plans. Each section of the embankment shall correspond to the detailed section or slopes established by the Engineer. After completion of the roadway, it shall be continuously maintained to its finished section and grade until the project is accepted.

3.3 EARTH EMBANKMENTS

A. Earth embankments shall be defined as those composed principally of material other than rock, and shall be constructed of accepted material from approved sources.

B. Except as otherwise specified, earth embankments shall be constructed in successive layers for the full width of the individual roadway cross section and in such lengths as are best suited to the sprinkling and compaction methods utilized.

C. Layers of embankment may be formed by utilizing equipment which will spread the material as it is dumped, or they may be formed by being spread by blading from piles or windrows dumped from excavating or hauling equipment in such amounts that material is evenly distributed.

D. No material placed in the embankment by dumping in a pile or windrow shall be incorporated in a layer in that position. All such piles or windrows shall be moved by blading or similar methods. Clods or lumps of material shall be broken and the embankment material mixed by blading, harrowing, disking, or similar methods.

E. Water required for sprinkling to bring the material to the moisture content necessary for maximum compaction shall be evenly applied. It shall be the responsibility of the Contractor to secure a uniform moisture content throughout the layer by such methods as may be necessary.

F. All earth cuts, full or part width cuts in side hill which are not required to be excavated below sub-grade elevation for base and backfill, shall be scarified to a uniform depth of at least six (6) inches below grade. The material shall be mixed and reshaped by blading and then sprinkled and rolled in accordance with the requirements outlined above for earth embankments and to the same density as required for the adjacent embankment.

3.4 COMPACTION

A. Each layer shall be compacted to the required density by suitable equipment.

B. The depth of each layer, prior to compaction, shall not exceed that depth which will produce six (6) inch compacted thickness. Prior to and in connection with, the compaction operation each layer shall be brought to the moisture content necessary to obtain the required density and shall be kept leveled with suitable equipment to insure uniform compaction of the entire layer.

C. For each layer of earth embankment and select material, it is the intent of this Specification to provide the density as required herein, unless otherwise shown on the Plans. Embankment soils shall be sprinkled as required and compacted to the extent necessary to provide not less than ninety-five (95) percent of the density as determined in accordance with Texas Highway Department Test Method Tex-113-E. Field density determinations will be made in accordance with approved methods.

D. When the Contractor states that each layer of earth embankment or select material is complete and ready for the next layer, tests as necessary will be made by the Engineer. If the material fails to meet the density specified, the course shall be reworked as necessary to obtain the specified compaction, and the compaction method shall be altered on subsequent work to obtain specified density. Such procedure shall be determined by, and subject to, the approval of the Engineer.

E. Should the sub-grade, due to any reason or cause, lose the required stability, density, or finish before the pavement structure is placed, it shall be re-compacted and refinished at the sole expense of the Contractor. Excessive loss of moisture in the sub-grade shall be prevented by sprinkling, sealing or covering with a subsequent layer of granular material. Excessive loss of moisture shall be construed to exist when the sub-grade soil moisture content is more than four (4) percent below the optimum for the density specified.

F. In addition to the requirements in the Roadway Excavation item of the Specifications covering the general selection and utilization of materials to improve the roadbed, embankments shall be constructed in proper sequence to receive the select material layers shown on Plans, with such modifications as may be directed by the Engineer. The layer of embankment immediately preceding the upper layer of select material shall be constructed to the proper section and grade within a tolerance of not more than 0.10 foot from the established section and grade when properly compacted and finished to receive the select material layer.

3.5 PROOF ROLLING

A. Prior to the placement of any material on native earth, the area shall be proof rolled. The native soil shall be rolled with sufficient intensity to bring out weak spots in the sub-grade which would otherwise fail during the construction process. The proof rolling shall be completed with equipment weighing at least 20 tons with tire pressures at least 50 and no more than 150 psi. A minimum of two coverage's of the proof roller will be required each succeeding trip of the proof roller shall be offset by not greater than one tire width. Rollers shall be operated at speed between 2 and 6 miles per hour. Areas failing this test shall be excavated to a depth not to exceed two feet and horizontally ten feet beyond the failed area in all directions. Earth removed from this area may be replaced, stabilized, or "dried out" at the discretion of the engineer. No additional payment will be made for proof rolling prior to placement of embankment.

END OF SECTION

SECTION 32 11 16

SUBGRADE PREPARATION AND COMPACTION

PART 1 - GENERAL

1.1 DESCRIPTION

A. This item shall consist of scarifying, blading and rolling the sub-grade to obtain a uniform texture and a uniform density throughout the required depth as shown on the Plans.

1.2 MEASUREMENT AND PAYMENT

A. When the Contractor thinks the sub-grade is ready for acceptance by the Engineer, he will have field densities performed on the sub-grade at his expense by an independent testing laboratory approved by the Engineer. These tests shall be taken at points directed by the Engineer with a maximum of one test per station of construction. These tests shall be performed by the method outlined in A.S.T.M. Designation D-698, or an equivalent method approved by the Engineer (Balloon Density or Harris Cup). A section will be considered satisfactory as to density when no single test indicates less than 98% Standard ASTM D-698. A written report containing the dry density, the moisture content and location of each in place sample taken shall be submitted to the Engineer.

B. Payment for compacted sub-grade shall be included in the unit price bid for "Concrete Pavement", "Flexible Base" or "Compacted Sand Sub-base" as the case may be. Price will be full compensation for removing excess material, shaping, fine grading and compacting the sub-grade; for furnishing and hauling all materials, blading, shaping, rolling and finishing, and all labor, tools and incidentals necessary to complete the work except roadway excavation. Payment will not be made for unauthorized work.

PART 2 – PRODUCTS

N/A

PART 3 – EXECUTION

3.1 GENERAL

A. The roadbed shall be excavated and shaped in conformity with the typical sections shown on the Plans and to the lines and grades established by the Engineer. The entire roadway cross-section including an area two (2) feet back of the proposed curb line shall be bladed clear of vegetation and scarified as directed by the Engineer. All unstable or otherwise objectionable material shall be removed or broken off to a depth of not less than six (6) inches below the surface of the sub-grade. Holes or depressions resulting from the removal of such material shall be backfilled with suitable material compacted in layers not to exceed six (6) inches. All soft and unstable material and other portions of the sub-grade which will not compact readily or serve the intended purpose shall be removed as directed. No direct payment will be made for such removal, except where each separate spot or area requiring removal exceeds ten (10) cubic yards, in which case measurement and payment will be made as provided in the SECTION 31 23 00 – EXCAVATION AND EMBANKMENT.

B. The sub-grade shall be scarified to the depth shown on the Plans and bladed and compacted in the manner directed in the section on "Finishing and Compaction". The surface of the sub-grade shall be finished to line and grade as established, and be in conformity with the typical sections shown on the Plans. Any deviation in excess of one-half (1/2) inch in cross-section and in a length of sixteen (16) feet measured longitudinally shall be corrected by loosening, adding or removing material, reshaping or compacting by sprinkling and rolling. Material excavated in the preparation of the sub-grade shall be disposed of as directed by the Engineer.

3.2 FINISHING AND COMPACTION

A. The sub-grade course, including an area two (2) feet back of the proposed curb line, shall be sprinkled as required and rolled as directed until a uniform compaction and required density is obtained. Compaction of the sub-grade may be done using any of the rolling equipment outlined in SECTION 31 11 29.02 - ROLLING. However, required densities must be met. Should the Engineer feel that too much time is being required to obtain those densities he can require that a heavy pneumatic roller be applied. Rolling shall continue until the sub-grade has been compacted to ninety-eight (98) percent of the Standard Density (A.S.T.M. Method D-698). The allowable deviation from optimum moisture content is 0 to +4%.

B. Rolling shall progress gradually from the sides to the center of the lane under construction, by lapping uniformly each proceeding track by at least twelve (12) inches.

C. After rolling and watering, the sub-grade shall be checked by the use of string line or instrument. All portions that do not conform to the lines and grades as shown on the Plans, shall be scarified for at least six (6) inches and re-compacted to correct elevation.

D. Until the base course or pavement is placed, the sub-grade shall be maintained free from ruts and depressions, in a smooth and compacted condition true to lines and grade and to the density requirements contained herein. All of the Contractor's hauling and other equipment used in such a way as to cause rutting and raveling of the sub-grade shall either be removed from the work or suitable runways or other equivalent means shall be provided to prevent rutting.

E. The Contractor shall be responsible for maintaining and protecting the roadbed for the entire length of the project.

F. During construction, grading of the sub-grade shall be conducted so that the berm of earth or other material does not prevent immediate drainage of water to the side. Ditches and drains along the sub-grade shall be maintained so as to drain effectively.

END OF SECTION

SECTION 32 11 29

LIME STABILIZATION

PART 1 - GENERAL

1.1 DESCRIPTION

A. This item shall consist of admixing commercial lime and/or lime slurry with the existing material, and mixing and compacting the mixed material to the required density. All work performed in this item shall be constructed as specified herein and in conformity with the typical cross-sections, lines and grades as shown on the Plans and as directed by the Engineer.

1.2 MEASUREMENT AND PAYMENT

A. Lime stabilized material as described in this section will be paid for at the unit price bid in the Proposal for the lime stabilized treatment, which price shall be full compensation for scarifying, preparation below secondary grade, furnishing, distributing, and mixing the lime and for all labor, supplies, water, fuel, tools, equipment and incidentals necessary to mix and compact the stabilized soil to the density specified in these Specifications. Payment will not be made for unauthorized work.

1.3 SUBMITTALS

Lime series Atterburg Limits

Lime series pH test (ASTM C977-83a-Annex Test Method)

Lime type

% Lime

PART 2 – PRODUCTS

2.1 MATERIALS

A. The lime to be used for stabilization shall meet with requirements of TX DOT DMS-6350: Lime and Lime Slurry" and DMS-6330, "Lime Sources Prequalification of Hydrated Lime and Quicklime". Use hydrated lime, commercial lime slurry, or pebble grade quicklime.

B. The amount of lime required for stabilization will be the percent by weight shown on the Plans, stated in the Special Provisions, or that amount which produces a pH not less than 12.4 and provides for a Plasticity Index less than 18.

2.2 TESTING REQUIREMENTS

A. After final mixing, a pH test, Atterberg Limit test and sieve analysis shall be performed in accordance with Tex-101-E, Part III.

B. Moisture and Density tests shall be taken at each construction station to ensure a density of at least 98% of maximum dry density at a moisture content between optimum and 4% wet of optimum in accordance with Standard Proctor (ASTM D698). All tests meeting these requirements shall be paid by the owner. The City will not pay for failing tests.

C. When requested by the Engineers Inspector, the contractor will proof roll areas in question with a 25 ton pneumatic tired roller or approved equal after lime stabilization is complete.

PART 3 – EXECUTION

3.1. GENERAL:

A. It is the primary requirement of this specification to produce a completed course of treated material containing a uniform line mixture, free form loose or segregated areas, of uniform density and moisture content, well bound for its full depth as shown on the detail sheet or specified in the Special Provisions and with a smooth surface suitable for placing subsequent courses. It shall be the responsibility of the Contractor to regulate the sequence of his work, to use the proper amount of lime, maintain the work and rework the courses as necessary to meet the above requirements.

B. The Contractor is required to ensure the existing sub-grade or embankment beneath the course to be lime stabilized is of proper density, uniformity and quality. The Contractor may elect to proof roll, replace and/or compact, areas that exhibit instability. If necessary, the Contractor may need to scarify, dry and compact the existing sub-grade prior to addition of lime. All work for the preparation of the existing sub-grade will not be paid directly, but will be considered a part of "Lime Stabilization".

3.2. APPLICATION:

A. Lime shall be spread only on that area where the first mixing operations can be completed during the same working day.

B. The lime shall be spread by a pre-approved screw type spreader box, bag distribution, or a pre-approved truck spreader, in the manner and at the rates directed by the Engineer. The lime shall be distributed at a uniform rate and in such a manner as to reduce the scattering of the lime by wind to a minimum. Lime shall not be applied when wind conditions, in the opinion of the Engineer, are such that blowing lime becomes objectionable. A motor grader shall not be used to spread the lime.

C. When pebble grade quicklime is placed dry, mix the material and lime thoroughly at the time of lime application.

3.3. MIXING:

A. The material shall be dried or wetted as directed by the Engineer, until the proper moisture content has been secured. All lime shall be mixed with the material to be treated immediately after application of lime. During the interval of time between application and mixing, hydrated lime that has been exposed to the open air for a period of six (6) hours or more or had excessive loss due to washing or blowing will not be accepted until totally reprocessed, refinished and retested. This will be done at the sole expense of the Contractor.

B. The soil-lime mixture shall be sprinkled during the mixing process as directed by the Engineer, to provide optimum moisture plus four (4) percent in the mixing immediately prior to starting the compaction operation.

C. The stabilized soil shall then be lightly sealed to allow for the mixture to mellow for 1 to 4 days. When pebble grade quicklime is used, allow the mixture to mellow for 2 to 4 days. The mixed material shall be kept moist during this period and traffic shall not be allowed on

the treated portion. The moisture content of the mixture should be within, optimum and four percent of optimum for the compactive effort specified.

D. After mellowing, resume mixing until a homogeneous friable mixture of material and lime is obtained, such that when all nonslaking aggregates retained on the 3/4" sieve are removed, the remainder of the material shall meet the following requirements when tested from the roadway in the roadway conditions by standard laboratory sieves:

Sieve	Percent Passing
1-3/4"	100%
3/4"	85%
#4	60%

After final mixing, the stabilized soil shall be bladed and compacted as specified below.

3.4. COMPACTION:

A. Compaction of the mixture shall begin immediately after final mixing. The material shall be aerated or sprinkled as necessary to provide the proper moisture. Compaction shall begin at the bottom and shall continue until the entire depth of mixture is uniformly compacted.

B. The course shall be sprinkled as required and compacted to the extent necessary to provide no less than ninety-eight (98) percent of the density measured by ASTM D698 at a moisture content between optimum and +4% wet of optimum moisture content. Grades shall be "blue-topped" during the compaction effort and the lime soil mixture shall be compacted to within 0.1 ft in cross-section and 0.1 ft in 16 ft measured longitudinally. In addition to the requirements specified for density, the full depth of the material shown on the plans shall be compacted to the extent necessary to remain firm and stable under construction equipment. Depth tests shall occur every 200 lf and shall be performed after compliance with density requirements.

C. If the material fails to meet the density requirements, it shall be reworked as necessary to meet these requirements. Throughout this entire operation the shape of the course shall be maintained by blading, and the surface upon completion shall be smooth and in conformity with the typical section shown on the plans and to the established lines and grades. Should the material due to any reason or cause, lose the required stability, density and finish it shall be re-compacted, refinished and retested at the sole expense of the Contractor.

3.5 EQUIPMENT

A. The machine, tools and equipment necessary for the proper prosecution of the work shall be on the project and pre-approved by the Engineer prior to the beginning of construction operations.

B. All machinery, tools and equipment used shall be maintained in a satisfactory and workmanlike manner.

C. To insure thorough mixing of the lime into the material to be stabilized, equipment shall be a pulverizer mixer equivalent to a Seaman Mixer, or soil stabilizing machine shall be used.

D. Hydrated lime shall be stored and handled in closed weatherproof containers until immediately before distribution on the road. If storage bins are used they shall be completely

enclosed. Hydrated lime in bags shall be stored in weatherproof buildings with adequate protection from ground dampness.

E. If lime is furnished in trucks, each truck shall have the weight of lime certified on public scales or the Contractor shall place a set of standard platform truck scales or hopper scales at a location pre-approved by the Engineer. Scales shall be certified as to accuracy by an independent pre-approved testing laboratory.

3.6 FINISHING AND CURING OF LIME-STABILIZED MATERIAL:

A. After the lime treated material has been compacted and brought to the required lines and grades in accordance with the typical sections, the completed section shall then be finished by rolling as directed with a pneumatic or other suitable roller sufficiently light to prevent hair cracking. The completed section shall be moist-cured for a minimum of five (5) days before further courses are added or any traffic is permitted, unless otherwise directed by the Engineer. If the sub-grade sets up sufficiently to prevent objectionable damage from traffic, the layer may be opened to traffic the day following compaction, unless otherwise directed by the Engineer.

B. Apply seals or additional courses within fourteen (14) calendar days after final compaction, unless otherwise directed by the Engineer.

END OF SECTION

SECTION 32 11 29.01

SPRINKLING

PART 1 - GENERAL

1.1 DESCRIPTION

A. This section shall consist of the authorized application of water on those portions of roadway shown on the Plans or as directed by the Engineer.

1. Compacting and preparing roadbed excavations, roadbed embankments, backfills, subgrades, subbases, bases and surfacings.
2. Preventing or alleviating dust nuisance originating within the highway right-of-way and the Project limits, which is not caused by Contractor operations at the Contractor's plants or plant setups.
3. Other watering when ordered, except for Extra Work.

1.2 MEASUREMENT AND PAYMENT

A. The water furnished and the work performed, as prescribed by this section, will be paid for in the unit price bid for the various items pertaining to the construction of embankment, sub-grade, sub-base and base. Price will include full compensation for all costs in connection with furnishing the water, including the city of Bryan tapping fee, and for all costs in connection with furnishing and operating approved sprinklers and necessary measuring devices. Payment is to include the application of the water as directed, all hauling, equipment, tools, labor, materials and incidentals necessary to complete the work. Payment will not be made for unauthorized work.

PART 2 – PRODUCTS

2.1 MATERIALS

A. Water shall be furnished by the Contractor and shall be clean and free from industrial wastes and other objectionable matter.

PART 3 – EXECUTION

3.1 CONSTRUCTION METHODS

The Contractor shall furnish and operate approved sprinklers equipped with positive and rapidly working out-off valves and approved spray bars which will insure the distribution of water in a uniform and controllable rate of application. The Contractor shall apply the water in the required quantity where shown on the Plans and/or as directed by the Engineer.

END OF SECTION

SECTION 32 11 29.02

ROLLING

PART 1 - GENERAL

1.1 DESCRIPTION

This section shall consist of the compaction of sub-grade, sub-base, base or asphaltic concrete pavements by the operation of approved power rollers, tamping rollers, or pneumatic tired rollers as herein specified and/or directed by the Engineer.

1.2 MEASUREMENT AND PAYMENT

The work prescribed by this section will not be paid for directly, but shall be considered as subsidiary work pertaining to the construction of embankments sub-grade, sub-base, base and surface, as the case may be.

PART 2 – PRODUCTS

N/A

PART 3 – EXECUTION

3.1 GENERAL

A. This work shall be done only when ordered by the Engineer. The compaction shall be accomplished by the methods outlined in the SECTIONS 32 11 16 - SUB-GRADE PREPARATION AND COMPACTION, SECTION 32 11 14 - FLEXIBLE BASE CRUSHED LIMESTONE, and SECTION 32 12 16 - HOT-MIX ASPHALTIC CONCRETE PAVEMENT. Tracked or lugged equipment will not be allowed on pavements at any time. In the event indicated rollers are not sufficiently weighted, nor have sufficient tire inflation capacity to produce the required degree of compaction, additional larger sized rollers will be required at no additional expense to the city.

B. Sufficient rollers shall be provided to compact the material in a satisfactory manner.

3.2 EQUIPMENT FOR SUBGRADE, SUB-BASE AND BASE

A. PNEUMATIC TIRED ROLLERS: Large pneumatic tired rollers shall be of a type having five (5) or more tires, with each tire being inflated to a pressure of 100 pounds per square inch. Total weight of the unit when loaded shall not be less than twenty-five (25) tons. The load shall be equally distributed to all wheels and the tires shall be uniformly inflated.

1. Small pneumatic tired rollers shall consist of not less than nine (9) pneumatic tired wheels running on axles in such a manner that the rear group will not follow in the tracks of the forward group and mounted in a rigid frame and provided with a body suitable for ballast loading. The wheel base of the roller shall be not less than five (5) nor more than ten (10) feet. The front axle shall be attached to the frame in such a manner that the roller may be turned within a minimum circle. The pneumatic tired roller under working conditions shall have an effective rolling width of approximately sixty (60) inches. It shall be so designed that by ballast loading, the load may be

varied uniformly from a minimum of one hundred (100) to a maximum of four hundred (400) pounds per inch of width of tire tread.

2. The tire pressure and the compression to be provided by the pneumatic roller shall be as directed by the Engineer. Pneumatic tired rollers shall be drawn by either a suitable crawler-type tractor, a pneumatic-tired tractor or a truck of adequate tractive effort, or may be of the self-propelled type and the roller when drawn or propelled by either type of equipment shall be considered a pneumatic tired roller unit. Unless otherwise directed, pneumatic tired rollers shall be operated within a speed range from two (2) to four (4) miles per hour.

B. TAMPING ROLLERS: Tamping rollers shall consist of two (2) metal rollers, drums or shells of forty (40) inches minimum diameter. Each not less than forty-two (42) inches in length and unit mounted in a rigid frame in such a manner that each roller may oscillate independently of the other. Each roller, drum or shell shall be surmounted by metal studs with tamping feet projecting not less than seven (7) inches from the surface and spaced not less than six (6) nor more than ten (10) inches measured diagonally center to center. The cross sectional area of each tamping foot measured perpendicularly to the axis of the stud, shall be not less than five (5) nor more than eight (8) square inches. The roller shall be supplemented with cleaning teeth to provide self cleaning. The roller shall be so designed that by ballast loading, the load on each tamping foot may be varied uniformly from one hundred, twenty-five (125) to one hundred, seventy-five (175) pounds per square inch of cross sectional area. The load per tamping foot will be determined by dividing the total weight of the roller by the number of tamping feet in one (1) row parallel to (or approximately so) the axis of the roller. The compression to be provided shall be as directed by the Engineer. The tamping roller shall be drawn by suitable power equipment of adequate tractive effort. Two (2) tamping rollers, consisting of four (4) cylinders, drawn by approved power equipment shall be considered a roller unit. Unless otherwise directed, tamping rollers shall be operated within a speed range of two (2) to three (3) miles per hour.

3.3 EQUIPMENT FOR HOT MIX ASPHALTIC CONCRETE PAVEMENT

A. POWER FLAT WHEEL ROLLERS: Power flat wheel rollers shall be of the three (3) wheel self-propelled type only, weighing not less than eight (8) tons nor more than twelve (12) tons. Power flat wheel rollers shall be operated with a speed range from two (2) to three (3) miles per hour and/or as directed.

B. PNEUMATIC TIRED ROLLERS: Pneumatic tired rollers for hot mix asphaltic concrete pavement shall conform to the Specifications as noted above for pneumatic rollers.

END OF SECTION

SECTION 32 13 13

CONCRETE PAVEMENT

(Sentences and/or paragraphs that are double underlined indicate revisions that were made from the 2009 specification.)

PART 1 - GENERAL

1.1 DESCRIPTION

This item shall consist of a pavement of Portland cement concrete as herein specified on the prepared base, subbase or subgrade course in conformity with the thickness, typical cross-sections, and to the lines and grades shown on the Plans by the Engineer.

1.2 MEASUREMENT AND PAYMENT

A. Concrete pavement shall be measured by the square yard of surface area of completed and accepted pavement or as shown on the bid documents. When the Plans, Specifications and Proposal required the construction of a "Monolithic Curb" the limits of measurement for concrete pavement shall be from back to back of curb.

B. The work performed and the materials furnished under this item and measured as provided under "Measurement" shall be paid for at the unit price bid per square yard for the thickness indicated in the Proposal. The unit price bid for "Concrete Pavement" shall be full compensation for shaping and fine grading the subgrade, forming, mixing, placing, jointing, finishing and curing all concrete; for furnishing all labor, tools, equipment, materials, and incidentals necessary to complete the work..

1.3 SUBMITTALS

See SECTION 03 30 00 - CONCRETE

Paving Plan

Joint Sealing Compound

Expansion Joint Material

PART 2 – PRODUCTS

2.1 MATERIALS

See SECTION 03 30 00 - CONCRETE

2.2 TESTING REQUIREMENTS

See SECTION 03 30 00 - CONCRETE

PART 3 – EXECUTION

3.1 GRADE CONTROL

The lines and grades shown on the contract drawings for each pavement category of the contract shall be established and maintained by means of line and grade stakes. The finished pavement grade lines and elevations shown on the contract drawings shall be established and controlled at the site of the work by the Contractor in accordance with benchmark elevations furnished by the Owner. The pavements shall be constructed to the indicated thicknesses and elevations. The tolerances permitted in thickness, smoothness, and grades are the normal deviations that may occur in pavement construction under good supervision. However, construction of pavement or any part thereof with intent to use maximum tolerances will not be permitted.

3.2 SUBGRADE, SUBBASE, BASE AND FORMS

A. EQUIPMENT:

1. Subgrade Planer: Subgrade planer mounted on visible rollers riding on the forms or edges or previously constructed slabs shall be provided for shaping the final surface of the subgrade, subbase, or base course. Any power equipment used to pull the subgrade planer shall not produce ruts or indentations in the subgrade, subbase or base course. The subgrade planer shall be equipped with steel cutting edge capable of being accurately adjusted to the required cross section. When the subgrade planer rides on the edges of the surface of previously constructed slabs, the planer shall be provided with rubber-tired rollers to prevent damage to surfaces and edges of the existing concrete.

2. Templates: The Contractor shall provide and operate a scratch template for checking the contour of the subgrade, subbase, or base course. The template or roller is to be mounted with the wheels supported on the side forms or concrete in adjacent lanes. It shall be of such strength and rigidity that under a test made by changing the support to the center the template will not show a deflection of more than 1/8 inch. The template shall be provided with adjustable rods projecting downward to the subgrade at not more than 1-foot intervals. These rods shall be adjusted to the required cross section of the bottom of the slab when the ends of the template are supported on the side forms or concrete in the adjacent lanes. The template shall be checked frequently during use to assure that the rods are in the correct position.

3. Forms: The forms shall be made of metal unless noted. Wood forms may be used on curves having a radius of 150 feet or less, as well as for fillets. Forms shall be equal in depth to the edge thickness of the slab as shown on the drawings. Forms shall be in one piece for the full depth required, except as noted. Where the drawings provide several different slab thicknesses, forms may be built up of metal or wood as provided. Forms may be increased in depth 25 percent by securely bolting or welding to the bottom a tubular metal section of the proper thickness or by securely bolting wood planks to the bottom of the steel form. The tubular metal section or wood planks shall completely cover the under side of the base of the steel form. It shall extend beyond the edge of the base a sufficient distance to provide the necessary stability against movement along the vertical face. The base width of the one-piece form, or built-up form, shall be not less than eight-tenths of the vertical height of the form.

   a.) *Metal Forms:* Metal forms shall be of a cross section and shall be furnished in sections not less than 10 feet in length. Curves having a radius of 150 feet or less the length of the sections shall be 5 feet unless the sections are flexible or curved to the proper radius. Each 10-foot length of form shall be provided with at least three form braces and pin sockets. The number and spacing of the form braces and pin sockets shall be such that the form will be rigidly braced

uniformly throughout its length and at the joints between form sections. Lock joints between form sections shall be free from play or movement. Metal forms shall have such strength that when tested as simple beam with a load equal to the weight of the heaviest machine to be used on the forms, the deflection will not exceed 1/8 inch in 10 feet. Forms shall be provided with adequate devices for secure setting to prevent springing, weaving, or settling from the impact and vibrations of the machine. Forms shall be free of warps, bends, or kinks. The top surface of a form shall not vary more than 1/8 inch in 10 feet from a true line. The face of the form shall not vary more than 1/4 inch in 10 feet from a true plane. Forms with battered top surfaces distorted faces or bases shall not be used. They are to be removed from the project site.

b.) *Wood Forms:* Wood forms for curves and fillets shall be made from well-seasoned, surfaced plank or plywood. The wood shall also be straight, free from warp or bend, and not less than 2 inches in nominal thickness. Wood forms shall be furnished in sections approximately 5 feet in length and shall be provided with adequate devices for secure setting to withstand springing, weaving, or settling from the impact and vibration of the placing and finishing operations.

4. Subgrade, Subbase or Base Course: The subgrade, subbase or base course shall be tested as to crown, elevation, and density in advance of setting the forms. The subgrade prior to final planing shall be completed to or above the plane of the typical sections shown on the drawings and the lines and grades established by the drawings or as directed. Any discrepancies shall be corrected in accordance with the requirements for subgrade, subbase or base course construction as specified.

5. Form Setting: After the subgrade, subbase or base course has been prepared as described above, the forms shall be set. The subgrade, subbase, or base course under the forms shall be firm and cut true to grade so that each in place form section will be firmly in contact for its entire length and base width. The form shall be staked into position. The top of the form will conform to the requirements specified for the finished surface of the concrete, and the longitudinal axis of the upstanding leg will not vary more than 1/4 inch from the straight-edge when tested by a 12-foot straight-edge. The length and number of pins in any section shall be sufficient to hold the form at the correct line and grade. Form sections shall be tightly locked together. Conformity to the alignment and grade elevations shown on the drawings shall be checked and necessary corrections made by the Contractor immediately prior to placing the concrete. Forms shall be set well in advance of concrete placement. At least 250 feet of forms and prepared subgrade, subbase or base course shall be provided before concrete placement starts. The forms shall be cleaned and oiled each time before concrete is placed.

6. Subgrade Between Forms: The subgrade, subbase, leveling course or base course shall be free of foreign matter, waste concrete, cement and debris at all times; shall be finished to the required section of the bottom of the pavement as shown on the drawings with specified equipment; shall be tested with a template operated and maintained by the Contractor; shall be maintained in a smooth, compacted condition, in conformity with the required section and established grade until the concrete is in place; shall be wetted down sufficiently in advance to insure a firm, moist, and satisfactory condition when the concrete is placed; shall, if required, be thoroughly wetted down the previous night or not less than 6 hours before placing the concrete; shall not be traversed with equipment or hauling on the prepared surface between

forms; in cold weather shall be prepared and protected in a satisfactory condition and entirely free from frost when the concrete is place; and shall not be treated with chemicals to eliminate frost.

7. Form Removal: Forms shall remain in place at least 12 hours after the concrete has been placed. Should weather conditions delay the early-strength gain of the concrete, the forms shall remain in place for a longer period. Forms shall be removed without injuring the concrete. Bars or heavy tools are not to be used against the concrete in removing the forms. Any concrete damaged in form removal will be repaired promptly by the Contractor at no cost to the Owner.

3.3 FINISHING

Finishing operations shall be started immediately after placement of the concrete. The sequence of operations shall be as follows: transverse finishing, longitudinal floating, straight-edge finishing, carpet drag finishing, and finally the edging of joints. The machine method of finishing shall be employed, except that hand methods may be permitted as approved by the engineer. Finishing equipment and tools shall be maintained clean, free from hardened concrete or grout, and in an approved condition.

A. MACHINE FINISHING:

1. Equipment: The transverse and longitudinal finishing machines shall be power driven, be of ample weight and power to produce proper finishing, and be able to withstand the roughest treatment anticipated under job conditions. The transverse-finishing machine shall be designed and operated to strike off, screed, and consolidate the concrete. It shall be equipped with two screeds readily and accurately adjustable for changes in pavement crown and compensation for wear and other causes. The longitudinal - finishing machine shall be provided with a longitudinal float not less than 10 feet in length, readily adjustable to a true plane and properly stiffened to prevent distortion during use. Screed and float adjustments of these machines shall be checked at the start of each day's paving operations and as often as required. Machines that cause frequent delays due to mechanical failure shall be replaced. Finishing machines that ride the edge of a previously constructed slab shall have rubber-tired wheels to prevent damaging the surface and edges of the concrete.

2. Transverse finishing: Concrete, as soon as placed, shall be accurately struck off and screeded to the crown and cross section shown on the drawings. The final surface elevation or grade is to be non-porous when properly consolidated and finished. The finishing machine shall make at least two trips over each area of pavement, and may make one or two additional trips as necessary to properly compact the concrete and produce a surface of uniform texture, as well as true to grade. However, excessive manipulation that brings to the surface an excess of mortar and water will not be permitted. Any equipment that cannot produce the required compaction and surface finish with the indicated number of trips will be considered unsatisfactory. The top of the form or pavement edge upon which the finishing machine travels shall be kept clean by an effective device attached to the machine, and by necessary hand methods. This will insure that the travel of the machine will be maintained true without lift, wobble, or other variation that would affect the precision of the finish.

3. Longitudinal Floating: After completion of finishing with the transverse-finishing machine, the longitudinal mechanical float shall be operated to smooth and finish the pavement to grade. The float shall be operated parallel to the centerline of the

pavement with a short, quick motion, and shall travel slowly along the pavement, maintaining contact with the surface at all times. If contact with the surface is not made at all points, additional concrete as required shall be placed and screeded. The float is to be operated over the same area until a satisfactory surface is produced. In advancing the float, each new position shall lap the previous position by not less than one-half the float length.

4. Other Types of Finishing Equipment: Other types of concrete finishing equipment may be used on a trial basis. Such finishing equipment shall be approved by the Engineer before being put into service. The use of equipment that fails to produce approved results when finishing concrete of the quality and consistency required by these specifications shall be discontinued. The concrete shall then be floated and finished with equipment in the manner as specified above.

B. HAND FINISHING: This method shall be employed only under the conditions previously specified, except as otherwise permitted and authorized by the Engineer.

1. Equipment: An approved strike and tamping template and a longitudinal float shall be provided for hand finishing. The template shall be at least 1 foot longer than the pavement width, be equipped with handles, and have edges at least 4 inches wide. The longitudinal float shall be 10 to 16 feet in length, with a cross section of an inverted T made of a 2 X 6 inch or wider plank for the base and a 2 X 8 inch plank for the vertical leg. The float shall be rigid, substantially braced, be able to maintain a plane surface on the bottom of the base, and shall have suitable handles for smooth and effective manipulation from the foot bridges. The bottom edges of the base of the float shall be rounded on a radius not exceeding 3/8 inch. Floats made of metal or a combination of wood and metal may be used provided they conform to the requirements for wood floats.

2. Finishing and Floating: Immediately after placement, concrete shall be struck off and screeded to the crown and cross section shown on the drawing. The consolidated and furnished surface elevation shall be in accordance with the drawings or as specified. The entire surface shall be tamped, and the tamping operation is to be continued until accomplishing the required compaction and reduction of internal and surface voids. Concrete that is inaccessible to the vibrating consolidating equipment shall be consolidated with the aid of hand-manipulated vibrators under provisions of the subparagraph 125.06 (C)"Vibration". Immediately following the final tamping of the surface, the pavement shall be floated longitudinally by hand from bridges resting on the side forms and spanning but not touching the concrete. If contact with the pavement is not made at all points by the float, additional concrete shall be placed as required and screeded, and the float operated until a satisfactory surface has been produced. After a section has been smoothed so that the float maintains contact with the surface of the concrete at all points, the bridges may be moved forward half the length of the float. The operation is to be repeated over the new and previously floated surfaces.

3. Straight-edge Finishing: Minor irregularities and score marks in the pavement surface shall be eliminated by means of long-handled wood floats and straight-edges after the longitudinal floating is completed, but while the concrete is still plastic. When necessary, excess water and laitance shall be removed from the surface transversely by means of a finishing straight-edge. The long-handled floats may be used to smooth and fill in open-textured areas in the pavement surfaces. The final finish shall be made with the straight-edges. The use of long-handled floats shall be held to a minimum as necessary to correct local surface unevenness not corrected by the longitudinal float.

Long-handled floats shall not be used to float the entire pavement surface. Straight-edges shall be 12 feet in length and may be operated from bridges and from the side of the pavement. A straight-edge operated from the side of the pavement shall be equipped with a handle 3 feet longer than one-half the width of the pavement. The surface shall then be tested for trueness with a 12-foot straight-edge held in successive positions parallel and at right angles to the centerline of the pavement in contact with the surface. The whole area is to be covered as to detect variations. The straight-edge shall be advanced along the pavement in successive stages of not more than one-half the length of the straight-edge. Depressions shall be immediately filled with freshly mixed concrete, struck off, consolidated, and refinished. Projections above the required elevation shall also be struck off and refinished. The straight-edge testing and finishing shall continue until the entire surface of the concrete is free from observable departure from the straight-edge, conforms to the required grade and contour and when hardened, will satisfy the surface requirements specified under subparagraph 125.13(B) "Surface Smoothness".

4. Carpet Drag Finishing: Use an artificial grass-type carpet having a molded polyethylene pile face with a blade length of 5/8 inch to 1 inch, a minimum weight of 70 ounces/square yard, and a strong, durable, rot-resistant backing material bonded to the facing. The surface of the pavement shall be dragged longitudinally in the direction of the concrete placement with the carpet drag when most of the water glaze or sheen has disappeared and before the concrete becomes non-plastic. The carpet drag should be of sufficient transverse length to span the full width of the pavement being placed and adjustable so that a sufficient longitudinal length of carpet is in contact with the concrete being placed to produce the desired texture. The leading transverse edge of the drag shall be securely fastened to a traveling bridge or a moveable support system. The carpet drag shall be cleaned and changed as required. The dragging shall be carefully done to produce a finished surface having a fine granular or sandy texture without leaving disfiguring marks. The surface of the pavement at joint edges shall be dragged as necessary with a small hand-operated drag following edge tooling. No tool marks of any kind shall be present on the finished surface.

3.4 CONSTRUCTION JOINTS

Construction joints shall be prepared for receiving the next pour by sweeping the surface of the joint clean with a stiff broom or wire brush to remove all laitance. All loose particles and debris shall be removed. The surface is to be dampened just prior to casting of concrete against the joint. Construction joints will be made only at locations shown on the Plans unless written permission is granted by the Engineer to make additional joints.

A. LONGITUDINAL CONSTRUCTION JOINTS: Longitudinal construction joints between paving lanes shall be located as indicated on the drawings. Dowels or keys shall be installed in the longitudinal construction joints as required and in accordance with the indicated details. Metal keyway forms shall be used for forming horizontal keyways. The dimensions of the keyway forms shall not vary more than plus or minus 1/16 inch from the indicated dimensions. The keyway form shall be securely fastened to the concrete form so that it will be at the mid-depth of the pavement within a tolerance of plus or minus 1/8 inch. All longitudinal construction joints shall be edged and subsequently sawed to provide a groove at the top conforming to the indicated details and dimensions.

B. TRANSVERSE CONSTRUCTION JOINTS: Transverse construction joints shall be installed at the end of each day's placing operations and at any other points within a paving lane when concrete placement is interrupted for 30 minutes or longer. All transverse construction joints in non-reinforced pavements shall be installed in the location of a planned transverse contraction or expansion joint. Transverse construction joints located at planned transverse joints shall be of the doweled type with one end of each dowel painted and greased to permit movement at the joint. These joints shall be edged and subsequently sawed to provide a groove at the top conforming to the indicated details and dimensions. When concrete placing is resumed, the planned joint spacing shall be used beginning with the first regularly scheduled transverse joint.

3.5 EXPANSION JOINTS

Three quarter (3/4) inch expansion joints shall be provided at forty (40) feet on center or of the type, size, and spacing shown on the Plans. The expansion joint materials shall be as shown on the plans or a recycled material, ¾" thick as manufactured by J.D. Russel Co., or approved equal. The joint sealing compound shall be Sonneborn SL-1 or approved equal. Manufacturers' recommendations must be strictly adhered to. Devices used for installing the joints shall be adequate to hold the parts of the joint in proper position while protecting the filler from damage during concreting operation. The devices shall also be removable without permanent detriment to the pavement. Adjacent sections of filler shall be fitted tightly together and held in line to insure continuity. Concrete shall be prevented from entering the expansion space. Any concrete that has flowed into a gap between an expansion joint strip and edge forms of the pavement shall be cut out immediately after removing the forms. Expansion joints shall be formed about structures and features that project through, into, or against the pavement. Joint filler must be of the type, thickness, and width as indicated or directed and installed to form a complete, uniform separation between the structure and pavement.

3.6 CONTRACTION JOINTS

A. Contraction joints shall be provided at twenty (20) feet on center or of the type, size, and spacing shown on the Plans. Contraction joints may be either tooled or sawed but must provide a minimum depth of ¼ of the thickness of the concrete and sealed as shown on the plans or with Sonneborn SL-1 or approved equal. When sawed joints are used, the sawing should begin as soon as the concrete has obtained adequate strength to resist raveling of the joint edges, generally between 4 and 24 hours. The joints must be flushed or blown clean immediately after sawing to keep the residue from setting up.

B. Transverse and longitudinal contraction joints shall be of the weakened-plane or dummy type, and shall be constructed in conformance with the indicated details and dimensions. Longitudinal contraction joints shall be constructed by sawing a groove in the hardened concrete with a power-driven saw. Tie bars in longitudinal contraction joints shall be prepared and placed across joints where indicated in the plans. They shall be correctly aligned and securely held in the proper horizontal and vertical position during the placing and finishing operations to the satisfaction of the Engineer.

1. Sawed Joints: The groove of contraction joints shall be not less than 1/4 inch nor greater than 3/8 inch in width for the entire depth of saw cut shown on the drawings. The upper portion of the groove is to be widened to not less than 3/8 inch nor more than 5/8 inch for a depth of 1/4 of the pavement thickness, plus or minus 1/8 inch, below the pavement surface.

The time of sawing shall be varied, depending on existing and anticipated weather conditions. Uncontrolled cracking of the pavement shall be prevented. Sawing of the joints shall commence as soon as the concrete has hardened sufficiently to permit cutting the concrete without excessive chipping, spalling, or tearing. The sawed faces of joints will be inspected for undercutting or washing of the concrete due to early sawing. If this action is sufficiently deep to cause structural weakness or excessive cleaning difficulty, as determined by the Engineer, the sawing operation shall be delayed until directed to resume. The sawing operation shall be carried on regardless of weather conditions. The joints shall be sawed at the required spacing consecutively in the sequence of the concrete placement. A chalk line or other suitable guide shall be used to mark the alignment of the joints. The saw cut shall be straight from edge to edge of the pavement and shall not vary more than 1/2 inch from the true joint alignment. Before sawing a joint, the concrete shall be examined closely for cracks. The joint shall not be sawed if a crack has occurred near the location chosen for a joint. Sawing shall be discontinued when a crack develops ahead of the saw cut.

The surface of pavement cured with membrane-curing compound shall be wetted with water in the region of the intended saw cut prior to sawing to protect the curing membrane from abrasion. Workmen and inspectors shall wear clean, rubber soled footwear, and the number of persons walking on the pavement shall be limited to those actually performing the sawing operation. Immediately after each joint is sawed, the saw cut and adjacent concrete surface shall be thoroughly flushed with water until all waste from sawing is removed from the joint. Any membrane-cured surface damaged during the sawing operations shall be re-sprayed as soon as the free water disappears. The sawing equipment shall be adequate in number of units and power to complete the sawing at the required rate. An ample supply of saw blades shall be available on the job before concrete placement is started. At least one standby sawing unit in good working order shall be available at the job site at all times during the sawing operations.

2. Dowels and Tie Bars: Dowels and tie bars shall be prepared and placed across joints where indicated. They are to be correctly aligned, and securely held in the proper horizontal and vertical position during the placing and finishing operations. Dowels shall be placed by the bonded-in-place method. The portion of the dowel inside the form shall be the bonded end. Dowels may be cut to length at the mill or shop by shearing in lieu of sawing, provided the deformation from true shape caused by shearing does not exceed the diameter of the bar by more than 0.04 inch and provided such deformation does not extend more than 0.04 inch from the end of the dowel. Dowels shall be clean, straight, and cut true to length with ends square and free from burs.

   In longitudinal and transverse construction joints, threaded split dowels may be used in lieu of one-piece dowels. The assembled split dowels shall have a length and diameter at least equal to that of a one-piece dowel of the required size. The screw-threaded portions of split dowels shall have a pitch diameter at least equal to the diameter of the one-piece dowel of the required size. The sleeve connector shall be of such length that when the split dowel is assembled the entire screw-threaded portions of the dowel are encased by the sleeve with dowel ends butting each other. Dowels in longitudinal and transverse construction joints shall be held securely in place by means of devices fastened to the forms.

   Dowels and tie bars installed within the paving lane shall be held securely in position by means of rigid metal frames or basket assemblies. The assemblies shall consist of a

framework of metal bars or wires arranged to provide rigid support for the dowels and tie bars throughout the paving operation. The assemblies shall also have a minimum of four transverse bars or wires, one of which shall be at or near each end of the dowel or tie bars with one for each end of the dowel bar at or near the subgrade. The dowels shall be welded to the assembly or held firmly by mechanical locking arrangements that will prevent the dowels from rising, sliding out, or becoming distorted under paving operations. The wires shall not be used as locking devices. The dowel-holding devices shall be held securely in the proper location by means of suitable pins or anchors. Dowels in longitudinal and transverse construction joints shall be held securely in place parallel to the surface and within 1/2 dowel diameter of the center of the slab depth. Dowels in expansion joints and tie bars installed within the paving lane shall be held securely in place with the center of the dowel or tie bar within 1/8 inch of the center of the slab depth.

The spacing of dowels in longitudinal construction joints shall be as indicated except where the planned spacing cannot be maintained due to form length or interference with form braces. Spacing shall be closer with additional dowels. Dowels in longitudinal joints shall be omitted when the center of the dowel would be located within a horizontal distance from a transverse joint equal to 1/4 of the slab thickness. The method used in holding dowels in position shall be accurate to detect errors in alignment of any dowel from its required position after the finished pavement. There shall not be an angle greater than one whose tangent is 1/96. The Contractor shall furnish a template for checking the position of the dowels.

The portion of each dowel intended to move within the concrete or expansion cap shall be coated with a thin film of grease or other approved de-bonding material. Provide dowel caps on the lubricated end of each dowel bar used in an expansion joint. Provide dowel caps filled with a soft compressive material with enough range to allow complete closure of the expansion joint.

3.7 LONGITUDINAL JOINTS

Longitudinal joints may be provided to assist in grade control or of the type, size, and frequency shown on the Plans. The longitudinal joint shall consist of a steel keyway or as shown on the plans. Manufacturer's recommendations must be strictly adhered to.

3.8 PAVEMENT PROTECTION:

The Contractor shall protect the paving against all damage prior to final acceptance of the work by the Owner. Traffic shall be excluded from the pavement by erecting and maintaining barricades and signs until the concrete is at least 3 days old or for a longer period if so directed. As a construction expedient in paving intermediate lanes between newly paved lanes, operation of the paving mixer and batch-hauling equipment will be permitted on the pavement after the pavement has been cured for seven days and the joints have been sealed or otherwise protected. Also, the subgrade planer, concrete finishing machines, and similar equipment may be permitted to ride upon the edges of the previously constructed slabs provided the concrete is more than 72 hours old and has attained a minimum flexural strength of 450 psi or a compressive strength of 2,800 psi. Additional protection to the slab edge may be required to prevent damage. The pavement carrying traffic or equipment shall be kept clean. All spillage of materials on concrete shall be cleaned up immediately upon occurrence, at no cost to the Owner.

3.9 PLAN GRADE AND SURFACE-SMOOTHNESS REQUIREMENTS:

The finished surfaces of all pavements shall conform to the grade line and elevations shown on the contract drawings and the surface-smoothness requirements:

A. PLAN GRADE: The finished surfaces of all pavements shall conform, within the tolerances specified and to the lines, grades, and cross sections shown on the contract drawings. The finished surfaces of the pavements shall not vary more than 0.04 foot above or below the plan-grade line or elevation established and approved at the site of the work. The finished surfaces of new abutting pavements shall coincide at their juncture. An approved transition pavement strip of the type and width shown on the drawings or as directed shall be installed where a new pavement abuts an existing pavement to provide the required and satisfactory pavement surface at the juncture of the new and existing pavements. Further, the 0.04 foot deviation from the approved grade line and elevation will not be permitted in any area of these pavements where closer conformance with planned grade and elevation is required for the proper functioning of any and all applicable structures.

B. SURFACE SMOOTHNESS: The finished surfaces of all pavements shall not deviate from the testing edge of an approved 12-foot straight-edge more than the tolerance shown for the respective pavement category of Table 350-1. In no instance shall the tolerance exceed more than 1/16 of an inch per foot.

TABLE 350-1

Pavement Category	Direction of Testing	Tolerances
Pavements having cross slopes of 1% or less	Longitudinal Transverse	1/8 inch 3/16 inch
Pavements having cross slopes greater than 1%	Longitudinal Transverse	1/8 inch 1/4 inch

C. EQUIPMENT: The Contractor shall furnish and maintain at the site one straight-edge in good condition for each longitudinal finishing machine for use by the Owner in testing the hardened portland-cement-concrete surfaces. These straight-edges shall be constructed of aluminum or other approved lightweight metal. They shall have blades with a box or box-girder cross-section with a flat bottom, adequately reinforced to insure rigidity and accuracy. Straight-edges shall be equipped with handles for operation on the pavement. The Contractor shall furnish and maintain at the site devices other than straight-edges, if approved, for surface-smoothness determinations. There shall be one such device for each longitudinal finishing machine for use by the Owner.

3.10 CURING

See SECTION 03 30 00 - CONCRETE

END OF SECTION

SECTION 32 16 13

CONCRETE CURB AND GUTTER

PART 1 - GENERAL

1.1 DESCRIPTION

A. This item shall consist of Reinforced CONCRETE CURB AND GUTTER constructed on approved subgrade in conformity with the lines and grades established by the City Engineer. CONCRETE CURB AND GUTTER shall also be in accordance with the standard section, specifications and ordinances for sidewalks adopted by the city in which CONCRETE CURB AND GUTTER is to be placed.

1.2 MEASUREMENT AND PAYMENT

A. Concrete curb and gutter shall be measured by the linear foot of length when complete and in place.

B. The work performed and the materials furnished and measured shall be paid for at the contract unit price bid for concrete curb and gutter. This shall include full compensation of all materials, labor, tools, equipment and incidentals necessary to complete the work. Payment will not be made for unauthorized work.

1.3 SUBMITTALS

See SECTION 03 30 00 - CONCRETE.

PART 2 – PRODUCTS

2.1 MATERIALS

This item shall consist of a mixture of reinforcing steel, coarse aggregate, fine aggregate, cement and water. The mixture shall conform to SECTION 03 30 00 - CONCRETE.

2.2 TESTING REQUIREMENTS

See SECTION 03 30 00 - CONCRETE.

PART 3 – EXECUTION

3.1 CONSTRUCTION METHODS

A. CONVENTIONALLY FORMED CONCRETE: Shape and compact subgrade, foundation, or pavement surface to the line, grade and cross section shown on the plans. Lightly sprinkle subgrade or foundation material immediately before concrete placement. Pour concrete into forms, and strike off with a template ¼ to 3/8 inches less than the dimensions of the finished curb unless otherwise approved. After initial set, plaster surface with mortar consisting of 1 part hydraulic cement and 2 parts fine aggregate. Brush exposed surfaces to a uniform texture.

B. EXTRUDED OR SLIP FORMED CONCRETE: Hand tamp and sprinkle subgrade or foundation material before concrete placement. Provide clean surfaces for concrete placement. If required, coat cleaned surfaces with approved adhesive or coating at the rate of application shown on the plans or as directed. Place concrete with approved self-propelled equipment. The forming tube of the extrusion machine or the form of the slip form machine must be easily adjustable vertically during the forward motion of the machine to provide variable heights necessary to conform to the established grade line. Attach a pointer or gauge to the machine so that a continual comparison can be made between the extruded or slip form work and the grade guideline. Other methods may be used when approved. Finish surfaces immediately after extrusion or slip forming.

C. JOINTS: Unless otherwise shown on the plans, the walk shall be cut transversely with a jointing tool every ten (10) feet after the concrete has been thoroughly worked and has sufficiently set. Expansion joints shall be located every forty (40) feet.

D. CURING: After the finished concrete has sufficiently set, it shall be covered with burlap and kept wet for a period of four (4) days. As an alternate the concrete may be cured by the application of a clear membrane seal coat that will retain 85% of the original mixing water at the end of three (3) days.

E. CLEANUP: After the construction work has been completed, the Contractor shall remove all debris, trash, excess materials, forms, stakes, empty sacks, etc. occasioned by his work from the premises. The site shall be left with a neat appearance. All excavation shall be backfilled and all excess excavated materials shall be disposed of.

END OF SECTION

SECTION 32 16 13.01

CONCRETE SIDEWALK

PART 1 - GENERAL

1.1 DESCRIPTION

This item shall consist of Reinforced Concrete Sidewalk constructed on approved subgrade in conformity with the lines and grades established by the City Engineer. Sidewalks shall also be in accordance with the standard section, specifications and ordinances for sidewalks adopted by the city in which sidewalk is to be placed.

1.2 MEASUREMENT AND PAYMENT

A. Concrete sidewalk shall be measured by the square foot of surface area when complete and in place.

B. The work performed and the materials furnished and measured shall be paid for at the contract unit price bid for concrete sidewalk. This shall include full compensation of all materials, labor, tools, equipment and incidentals necessary to complete the work. Payment will not be made for unauthorized work.

1.3 SUBMITTALS

See SECTION 03 30 00 - CONCRETE.

PART 2 – PRODUCTS

2.1 MATERIALS

This item shall consist of a mixture of reinforcing steel, coarse aggregate, fine aggregate, cement and water. The mixture shall conform to SECTION 03 30 00 - CONCRETE.

2.2 TESTING REQUIREMENTS

See SECTION 03 30 00 - CONCRETE.

PART 3 – EXECUTION

3.1 GENERAL

A. The subgrade shall be excavated and fine graded to a true grade. Any backfill shall be watered and tamped well ahead of the placing of the concrete. If dry, the subgrade shall be sprinkled immediately before depositing any concrete. Forms shall be metal or wood, free of warp and of a depth equal to the depth of the concrete. They shall be secured and accurately staked to line and grade and held in a true position during the placing of the concrete. Expansion joints of an approved material shall be used between the sidewalk and all abutting concrete. Placement of concrete may begin after the subgrade is thoroughly compacted and the forms, expansion joints (where necessary) and reinforcing steel are in place. The concrete shall be thoroughly worked with a flat spade or similar tool along the forms as the pouring continues to insure the absence of honeycombs. No concrete over thirty (30)

minutes old or retempered concrete shall be used. After the placing of the concrete has sufficiently advanced, the concrete shall be struck off flush with the forms. Then the concrete shall be worked with a wooden float to flush excess mortar to the surface. All exposed corners are to be edged or rounded to the radius shown on the Plans.

B. Unless otherwise shown on the plans, the walk shall be cut transversely with a jointing tool at a width equal to the sidewalk width after the concrete has been thoroughly worked and has sufficiently set. Expansion joints shall be located every forty (40) feet.

C. After the finished concrete has sufficiently set, it shall be covered with burlap and kept wet for a period of four (4) days. As an alternate the concrete may be cured by the application of a clear membrane seal coat that will retain 85% of the original mixing water at the end of three (3) days.

D. After the construction work has been completed, the Contractor shall remove all debris, trash, excess materials, forms, stakes, empty sacks, etc. occasioned by his work from the premises. The site shall be left with a neat appearance. All excavation shall be backfilled and all excess excavated materials shall be disposed of.

END OF SECTION

SECTION 33 01 30.13

TESTING FOR SANITARY SEWAGE GRAVITY SYSTEM

(Sentences and/or paragraphs that are double underlined indicate revisions that were made from the 2009 specification.)

PART 1 - GENERAL

1.1 DESCRIPTION

A. This is a general specification, which applies to the furnishing of all labor, materials, tools, and equipment to perform all operations in connection with leakage testing for completed manholes and gravity sewer pipe and deflection testing for flexible sewer pipe.

1.2 MEASUREMENT AND PAYMENT

A. Testing of sewer lines (except for T.V. Inspection), manholes and appurtenances shall not be considered a separate pay item. T.V. Inspection will be paid for as a separate bid item. The Contractor shall supply all water for the tests, all equipment and labor necessary to convey the water into the sewer, the necessary transportation to transport test plugs and risers from one test site to another and such labor and equipment as may be required in installing test plugs, and other incidental work in conducting the tests and the cost thereof shall be included in the price for constructing the sewer, including furnishing the test plugs.

PART 2 – PRODUCTS

2.1 TESTING REQUIREMENTS

A. MANHOLE TESTING

After completion of manhole construction, wall sealing, or rehabilitation, test manholes for leakage using Vacuum Testing or, if pre-approved by the City Engineer, Exfiltration Testing Procedures as specified herein.

1. General

Plug influent and effluent lines, including service lines, with suitably sized pneumatic or mechanical plugs. Ensure plugs are properly rated for pressures required in this test; follow Manufacturer's safety and installation recommendations. Place plugs a minimum of 6 inches outside of manhole walls.

2. Vacuum Testing

a.) To perform a vacuum test, all lift holes and exterior joints shall be plugged with a non-shrink grout and all pipes entering a manhole shall be plugged.

b.) No grout must be placed in horizontal joints before testing.

c.) Stub-outs, manhole boots, and pipe plugs must be secured to prevent movement while a vacuum is drawn.

d.) Contractor shall use a minimum 60 inch/lb torque wrench to tighten the external clamps that secure a test cover to the top of a manhole.

e.) A test head must be placed at the inside of the top of a cone section, and the seal inflated in accordance with the manufacturer's recommendations.

f.) There must be a vacuum of 10 inches of mercury inside a manhole to perform a valid test.

g.) A test does not begin until after the vacuum pump is off.

h.) A manhole passes the test if after 2.0 minutes and with all valves closed, the vacuum is at least 9.0 inches of mercury.

3. Hydrostatic Testing

a.) The maximum leakage for hydrostatic testing or any alternative test methods is 0.025 gallons per foot diameter per foot of manhole depth per hour.

b.) Seal all wastewater pipes coming into a manhole with an internal pipe plug, fill the manhole with water up to the manhole cover and maintain the test for at least one hour.

c.) A test for concrete manholes may use a 24-hour wetting period before testing to allow saturation of the concrete.

B. GRAVITY PIPE LEAKAGE TESTING

1. General

Tests shall be made by the low-pressure air test, the infiltration test or the joint test. The infiltration test shall be used when the groundwater level is at least 2 ft above the crown of the pipe measured at the upstream manhole. The joint test shall be used for pipe sections greater than 36-inch inside diameter. The Contractor may use the joint test for pipe with a 27-inch through 36-inch average inside diameter at the approval of the Engineer or his representative. The low-pressure air test, the infiltration test and the exfiltration test shall be conducted from manhole to manhole. Trenches shall be completely backfilled and sewer line should be free of debris prior to testing. Plug all pipe outlets including laterals and secure plugs to prevent leakage blowout due to testing pressure.

2. Infiltration Test

a.) *Performance:*

The total infiltration, as determined by a hydrostatic head test, shall not exceed 50 gallons per inch of diameter per mile of pipe per 24 hours at a minimum test head of 2.0 feet above the crown of a pipe at an upstream manhole. For construction within the 100-year flood plain, the total infiltration shall not exceed ten gallons per inch of diameter per mile of pipe per 24 hours.

NORMAL CONSTRUCTION

SIZE OF PIPE	ALLOWABLE LEAKAGE* Gal/Min/100 Ft.
6"	0.0039
8"	0.0053
10"	0.0066
12"	0.0079
15"	0.0099
18"	0.0118
21"	0.0138
24"	0.0158
27"	0.0178
30"	0.0197
36"	0.0237

* Equivalent to 50 gal. per inch diameter per mile per 24 hours

CONSTRUCTION WITHIN 100 YR FLOOD PLAIN

SIZE OF PIPE	ALLOWABLE LEAKAGE* Gal/Min/100 Ft.
6"	0.0008
8"	0.0011
10"	0.0013
12"	0.0016
15"	0.0020
18"	0.0024
21"	0.0028
24"	0.0032
27"	0.0036
30"	0.0039
36"	0.0047

* Equivalent to 10 gal. per inch diameter per mile per 24 hours

The total leakage in cubic inches shall be the total cross-sectional area in square inches of the inside of the two risers and of any stacks in the sewer multiplied by the drop in water level in inches. For diameters not listed in chart, multiply the square of the diameter by the following chart value for 1" diameter.

DIAMETER OF RISER OR STACK	VOLUME PER INCH OF DEPTH	
	Cubic Inch	**Gallon**
1"	0.7854	.0034
2"	3.1416	.0136
2-1/2"	4.9087	.0212
3"	7.0686	.0306
4"	12.5664	.0544
5"	19.6350	.0850
6"	28.2743	.1224
8"	50.2655	.2176

b.) *Execution:*

Stop all dewatering operations and allow the groundwater to return to its normal level and allow to remain so for at least 24 hours. Leakage shall be determined by measuring the flow through the opening in the downstream plug for at least 15 minutes. Five separate measurements shall be made. The average of the measurements shall be used, discarding any one of the five measurements except the last that varies by more than 50% from the average of the other four. If the results of the tests are otherwise satisfactory, but the last of the five measurements show leakage in excess of that permitted, the tests shall be continued to determine if additional leaks may have developed during testing.

3. Air Test

a.) *Performance:*

The pipe shall be pressurized to 5 pounds per square inch gauge (psig) greater than the pressure exerted by groundwater above the pipe. Once the pressure is stabilized, the minimum time allowable for the pressure to drop 1.0 psig shall be 5 minutes per every 100 feet of pipe plus (+) 5 minutes per each service connection. Pipe sizes larger than 27 inches shall be tested as per TCEQ requirements.

The test may be stopped if no pressure loss has occurred during the first 25% of the calculated testing time. If any pressure loss or leakage has occurred during the first 25% of the testing period, then the test shall continue for the entire test duration as outlined in this subparagraph or until failure.

b.) *Execution:*

Add air until the internal air pressure of the sewer line is raised to approximately 5.5 psig. Allow the air pressure to stabilize. The pressure will normally drop until the temperature of the air in the line stabilizes.

When the pressure has stabilized and is at or above the starting test pressure of 5 psig, commence the test by allowing the gage pressure to drop to 5 psig at which point the time recording is initiated. Record the drop in pressure for the test period.

4. Joint Test

The joint test may be conducted by an air test or water test. The joint and the pipe segment shall be visually inspected immediately after testing.

a.) *Performance:*

The pipe is to be pressurized to 3.5 psig greater than the pressure exerted by groundwater above the pipe. Once the pressure has stabilized, the minimum time allowable for the pressure to drop from 3.5 psig to 2.5 psig shall be ten seconds.

If the groundwater pressure is equal to or greater than 3.5 psig, and the sewer line or joint is not leaking the sewer line or joint is acceptable and no additional testing is required. If one or more joints are leaking, but the total amount of leakage in the sewer line being tested is equal to, or less than, the allowable leakage specified in 250.03-B-1 "Performance", the line is acceptable and no additional testing is required provided visible leaks are repaired. Moisture or beads of water appearing on the surface of the joint will not be considered as visible leakage.

b.) *Execution:*

Review proper operation, safety, and maintenance procedures as provided by the manufacturer of the joint test apparatus. Move the joint test apparatus into the sewer line to the joint to be tested and position it over the joint. Make sure the end element sealing tubes straddle both sides of the joint and the hoses are attached. For the water test, the bleed-off petcock must be located at top dead center. Inflate end element sealing tubes with air in accordance with equipment and manufacturer's instructions.

i. Air Test - Pressurize the void volume with air to 3.5 psig greater than the pressure exerted by groundwater above the pipe. The drop in pressure shall be measured over ten seconds. Five separate measurements shall be made. The average of the measurements shall be used, discarding any one of the five measurements except the last that varies by more than 50% from the average of the other four. If the results of the tests are otherwise satisfactory, but the last of the five measurements show leakage in excess of that permitted, the tests shall be continued to determine if additional leaks may have developed during testing.

ii. Water Test - Introduce water into void volume until water flows evenly from open petcock. Close the petcock and pressurize with water to 3.5 psig above the pressure exerted by ground water. The drop in pressure shall be measured over ten seconds. Five separate measurements shall be made. The average of the measurements shall be used, discarding any one of the five measurements except the last that varies by more than 50% from the average of the other four. If the results of the tests are otherwise satisfactory, but the last of the five measurements show leakage in excess of that permitted, the tests shall be continued to determine if additional leaks may have developed during testing.

C. DEFLECTION TESTING

Deflection tests shall be performed on all flexible pipes. For pipelines with inside diameters less than 27 inches, a rigid mandrel shall be used to measure deflection. For pipelines with an inside diameter 27 inches and greater, a method pre-approved by the Engineer shall be used to test for vertical deflections. Other methods shall provide a precision of two tenths of one percent (0.2%) deflection. The test shall be conducted after the final backfill has been in place at least 30 days. No pipe shall exceed a deflection of 5.0%. If a pipe should fail to pass the deflection test, the problem shall be corrected and a second test shall be conducted after the final backfill has been in place an additional 30 days. The tests shall be performed without mechanical pulling devices.

1. Mandrel Sizing

The rigid mandrel shall have an outside diameter (O.D.) equal to 95% of the inside diameter (I.D.) of the pipe. The inside diameter of the pipe, for the purpose of determining the outside diameter of the mandrel, shall be the average outside diameter minus two minimum wall thicknesses for O.D. controlled pipe and the average inside diameter for I.D. controlled pipe. All dimensions shall be per appropriate standard. Statistical or other "tolerance packages" shall not be considered in mandrel sizing.

2. Mandrel Design

The rigid mandrel shall be constructed of a metal or rigid plastic material that can withstand 200 psi without being deformed. The mandrel shall have nine or more "runners" or "legs" as long as the total number of legs is an odd number. The barrel section of the mandrel shall have a length of at least 75% of the inside diameter of the pipe. A proving ring shall be provided and used for each size mandrel in use.

3. Method Options

Adjustable or flexible mandrels are prohibited. A television inspection is not a substitute for the deflection test. A deflectometer may be approved for use on a case-by-case basis. Mandrels with removable legs or runners may be accepted on a case-by-case basis. Mechanical devices will not be used to pull the mandrel.

D. TV CAMERA INSPECTION

T.V. Camera Inspection shall be performed on all sewer pipe installed before acceptance. When the Contractor performs the inspection, the City Engineer or his representative shall be notified one working day prior so that he can view the procedure. The inspection shall be in digital video format, saved to a DVD or CD (enclosed within a protective case) and shall be given to the City Engineer or his representative for review and final records.

The lines shall be completely filled with potable water between manholes to fill the service connections and drained prior to T.V. Camera Inspection. Line shall be cleaned prior to T.V. inspection. All dirt/debris, including pipe grease, in the line which could cover a defect shall be removed. Line should be cleaned before being filled with water. Jetting of the lines in conjunction with the T.V. Inspection is prohibited. If the line to be televised is discovered to contain foreign material, which prohibits an acceptable T.V. inspection, the line shall be jetted and televised again.

Select and use closed circuit television equipment that will produce a color digital video that clearly shows pipe, joints and all appurtenances, and shall be a self propelled tractor-type system. Produce and use closed circuit television equipment using a panorama tilt, radial viewing, pipe inspection camera that pans plus and minus 75 degrees, rotates 360 degrees,

and has optical zoom from 6 or less inches to infinity. The camera must have an accurate footage counter accurate to within 1 foot per 500 foot of pipe. Footage shall be continuously displayed on the video at all times. The camera operator shall pause at each tee, tilt camera and view up into the branch for inspection of joints and fittings maintaining a clear in focus picture at all times while zooming to the full extent of the camera. The camera operator shall stop at each fitting and change in pipe type and complete a 360 degree view of the fitting slow enough to identify all defects. Glare shall be avoided and shall not interfere with viewing the pipe segment. Maximum rate of travel for the camera shall be 30 feet per minute. DVDs or CDs shall be continuous from pipe segments between manholes. Provide DVDs or CDs with labels indicating project number, segment number, date televised, date submitted, starting manhole number, ending manhole number, pipe diameter, pipe length and street name.

The T.V. inspection shall be used to identify defective construction such as sags, debris, separated joints, etc. The City Engineer shall make all final determinations if the severity of the defect constitutes failure and subsequent removal of the segment in question.

E. RETESTS

Manholes or sewers which fail to meet the testing requirements shall be repaired and retested by the Contractor. All repairs and retesting shall be performed at the expense of the Contractor.

PART 3 – EXECUTION

3.1 GENERAL

A. The Contractor shall notify the City Engineer or his representative when the manholes and line are ready to be tested. After the City Engineer or his representative concurs that the line is ready to be tested, the Contractor may proceed with testing. The Contractor will supply and set-up the test plugs and risers for the test and will perform the test in the presence of the City Engineer or his representative.

B. Contractor shall take such precautions as required to prevent damage to lines and appurtenances being tested. Damage resulting from tests shall be repaired at Contractor's expense.

END OF SECTION

SECTION 33 31 13

SANITARY SEWAGE SYSTEM

PART 1 - GENERAL

1.1 DESCRIPTION

A. This is a general specification, which applies to the furnishing of all plant, labor, equipment, appliances and materials and in performing all operations in connection with the construction of sanitary sewers, together with the manholes, cleanout structures and other incidentals, in accordance with the plans and these specifications.

1.2 RELATED WORK

SECTION 31 78 00 - PIPE BORING, JACKING, & TUNNELING
SECTION 31 23 33 - EXCAVATING, TRENCHING, & BACKFILL
SECTION 33 05 01 - PVC PIPE & FITTING
SECTION 33 05 02 - DUCTILE IRON PIPE
SECTION 33 39 13 - MANHOLES
SECTION 33 39 14 - SEWER SERVICES

1.3 MEASUREMENT AND PAYMENT

A. Payments will be made at the price bid per foot for furnishing and installing pipe, which bid price will include all costs for the complete pipe installation, including line fittings, trenching, and backfill, embedment, compaction or tamping, sterilization, testing, final cleanup, and all other work not otherwise provided for in bid proposal. Pipe will be measured (by horizontal distance) from center of fitting to center of fitting, or end of pipe without deduction for the length of intermediate fittings.

1.4 SUBMITTALS

A. All submittal requirements are listed with the material specifications

PART 2 – PRODUCTS

2.1 TESTING REQUIREMENTS

See: SECTION 33 01 30 - TESTING OF GRAVITY SEWER SYSTEMS

PART 3 – EXECUTION

3.1 GENERAL

Construction methods for each material are specified in the material specifications.

A. MINIMUM DEPTH

The desired depth for sanitary sewer pipe shall be six feet (6') as measured from the outside top of pipe vertically to finished ground or pavement surface elevation. The minimum depth shall be two feet (2’). Where the cover is 3.5’ or less, ductile iron pipe should be used and cement stabilized sand backfill required where erosion may occur.

END OF SECTION

SECTION 33 39 13

MANHOLES

(Sentences and/or paragraphs that are double underlined indicate revisions that were made from the 2009 specification. Additional revision is indicated by a dashed underline.)

PART 1 - GENERAL

1.1 DESCRIPTION

A. This item shall govern the manufacture, construction, and installation of sanitary sewer manholes. All manholes shall conform to TCEQ requirements. Submittal and approval shall be required for all pre-cast design.

1.2 MEASUREMENT AND PAYMENT

A. The depth of manholes completed shall be determined by measuring the vertical distance from the flow line of the sewer main to the top of the manhole ring and cover.

B. Standard manholes shall be measured by the each for various size diameters and depths.

C. The contract unit prices shall be the total compensation for furnishing all labor, materials, tools, equipment, and incidentals and performing all work, of whatever nature required, that is necessary for the completion of the manholes in accordance with the provisions of the plans and these specifications. Material or methods used to stabilize the foundation shall be subsidiary to the bid item for Manholes.

D. Cleanouts for services shall be considered subsidiary to the price for each service connection.

E. Drop connections will be measured for payment per each, complete in place regardless of depth.

1.3 SUBMITTALS

A. Submit manufacturer's data on materials furnished indicating compliance with the specifications regarding dimensions, thickness, weights, and materials.

B. Submit manufacturer's "Certificate of Compliance" stating that the materials furnished comply with this specification.

PART 2 – PRODUCTS

2.2 MATERIALS

A. CONCRETE

Refer to SECTION 03 30 00 - CONCRETE

B. MANHOLE RINGS AND COVERS

The standard rings and covers (V-1432-3) and the water-tight ring and cover (V-2432-3) shall be manufactured by East Jordan Iron Works (or pre-approved equal.) The manhole shall bear the appropriate model number, the logo of City and the words "Sanitary Sewer". The cover shall have pick lugs cast into the surface. All manhole ring and covers shall have a 32" diameter.

C. GRADE RINGS

Grade rings shall be precast reinforced concrete. Minimum thickness shall be 2 inches by 8 inches wide by 30 inches inside diameter.

D. PRECAST REINFORCED MANHOLE SECTIONS

Precast manhole sections conform to the current ASTM C478 standard. Joints shall be O-ring gasketed. Thickness for manhole risers shall be as listed under wall "B" in the "Class Tables" of ASTM C76, Reinforced Concrete Pipe.

E. PRE-CAST MANHOLE BASES

Pre-cast manhole bases will conform to all TCEQ requirements and City Specifications for invert depths, reinforcement, base thickness and manhole depth for pipe size.

F. DROPS

Drops shall be constructed of either ductile iron as specified in SECTION 33 05 02 – DUCTILE IRON PIPE or PVC pipe as specified in Section 33 05 01 - POLYVINLYLCHLORIDE PIPE AND FITTINGS. City of Bryan requires drops to be placed on the inside of a manhole, using a cross to allow access to the vertical pipe, for all pipes up to and including 12" in size. Outside drops will not be allowed unless pre-approved by City of Bryan. City of College Station requires drops to be placed on the outside of a manhole, using a size on size wye, for all pipes 6" in size and larger. For pipes smaller than 6", within the City of College Station, drops shall be placed inside of manhole using a cross.

2.2 TESTING REQUIREMENTS

See SECTION 33 01 30 - TESTING OF GRAVITY SEWER SYSTEMS.

PART 3 – EXECUTION

3.1 INSTALLATION

A. MANHOLE BASES

1. Construct manhole bases in the configuration shown on the Plans. Minimum thickness below the flowline of sewer shall be 8 inches or as shown on the details.
2. Insure that bases are constructed or installed on firm ground and that ground water is controlled. Install appropriate material for a minimum of 4" to stabilize bottom if directed to do so by the Engineer.
3. The invert of manholes shall be formed in such a fashion that they are smooth and will not obstruct flow of sewage. Provide flow channels in the manhole base equivalent to the top of the pipe by forming the concrete base and trowelling it to a smooth, even finish with a steel trowel. Slope the manhole bench from the wall line to edge of flow channel and trowel it smooth on a grade of 1 inch per foot with a liberal radius applied at flow channel intercepts.

B. PRECAST MANHOLES

1. Precast Manhole bases shall be placed on a 6" minimum depth layer of cushion sand, gravel or pre-approved material.

2. Cast bottom section of precast manhole riser ring in manhole base as shown on the Plans. Place "Synko-Flex" waterstop (or pre-approved equal) per manufacturer's recommendations prior to setting precast starter ring.

   The base shall have a minimum diameter 12 inches greater than the outside diameter of the manhole, and a minimum thickness including the area under the pipe as follows:

   0' to 12' deep manhole ..... 8" base thickness
   Greater than 12'depth ..... 12" base thickness

3. All invert channels shall be smooth and accurately shaped to a semi-circular bottom conforming to the outside of the adjacent sewer section. Inverts shall be formed directly in the concrete of the manhole base or may be constructed by laying full section sewer pipe straight through the manhole and cutting out the top half after the base is constructed. Changes in the direction of the sewer and entering branches shall have a true curve of as large a radius as the size of the manhole will permit. Where the largest pipe at a manhole is less than 12", the channel depth shall be one half of the largest pipe diameter. When the largest pipe at the manhole is between 12 and 24 inches (inclusive,) the channel depth shall be three fourths of the largest pipe diameter. When the largest pipe at a manhole is greater than 24", the channel depth shall match the largest pipe. In all cases, the edges of the pipe along the invert and at the walls of the manhole shall be plastered and brush-finished. Plaster shall be non-shrink or hydraulic grout.

4. Where inlet leads, main or lateral pipe sewers enter manholes, pipes shall be cut off flush with inside of manhole any irregularities shall be grouted up with non-shrink grout. Install stub outs, where shown, to line and grade. Use one full joint of pipe, of size indicated, for stub out. Seal stub out with plug. Install plug in such a manner as to prevent seepage of leakage through stub outs. Installation of plug shall be such that it may easily be removed in future without damaging bell or groove end of stub out.

5. If manholes are constructed in streets where immediate subsequent paving or re-paving is involved, readjust the manhole ring and covers, immediately prior to the paving operations. Manholes shall be installed with joints of size and numbers required to obtain correct depth. Contractor is responsible for verifying correct manhole depth before construction. Initially, manhole tops shall be not less than 6-inches nor greater than 18-inches from final grade. If manholes are relocated in the field because of unforeseen conflicts, the Contractor is responsible for correct depth of manhole. Manhole tops shall be set as follows:

   a.) Developed Areas: Set manhole tops 1-inch higher than existing elevation of natural ground or other final grade when specified by the Engineer.

   b.) Undeveloped Areas: Set manhole tops flush with paved surfaces and 6-inches higher than shoulder and/or proposed final grade elevations in easements or other unpaved areas. Where manholes are located in bottom of ditches, either set manhole top by EJIW V-2342, or pre-approved equal, flush with ditch bottom and seal with solid cover, or set twelve inches above ditch top and reshape ditch around manhole.

6. Prior to placing each section of manhole riser or cone, thoroughly clean the bells and spigots to be joined.

7. Backfilling will be performed evenly and carefully around the manhole after the full strength of the concrete is attained.

8. Carefully place the O-ring gasket and check for proper alignment.
9. Plug lift holes, interior joints, and exterior joints with "Water Plug" grout.
10. Each manhole shall be individually vacuum tested according to the SECTION 33 39 13 - MANHOLES. Stub-outs, boots, and pipe plugs shall be secured to prevent movement while the vacuum is being drawn.

C. CAST-IN PLACE MANHOLES

Cast-In place manholes are not allowed without prior approval from the City Engineer. This approval shall only be in emergency situations.

D. FIBERGLASS MANHOLES

Fiberglass manholes are permitted with written approval from the City Engineer.

E. INSTALLATION OF MANHOLE AROUND EXISTING SEWER PIPE (City of College Station Only)

Should a manhole need to be installed around an existing sewer, the existing sewer pipe must first be exposed and an invert constructed under the pipe. The excavation must be kept free of water while the manhole is being constructed. Inverts may be formed by pouring the concrete invert (3,000 psi) and cutting out the top half of the pipe. A precast manhole section, with U-shaped cutouts for the pipe, can then be installed over the existing pipe. The voids of the cutout must then be filled with hydraulic cement. The top sections of the manhole shall be constructed per the standard manhole specification. Cast-in-place manholes will also be permitted for installation around existing sewers. The sanitary sewer pipe shall not protrude into the trough of the manhole (all pipe shall be flush with the manhole).

E. SERVICE CONNECTIONS

Service connections at manholes will meet all other requirements of this specification and shall be tied into the manhole with a manhole boot. At the time of construction, the Engineer will designate the locations of the service outlets and the depth to the top of the lateral pipe, if depth is not indicated on the plans. The minimum depth of cover over the end of the lateral pipe shall be no deeper than what is required to serve the intended lot.

F. CLEANOUT STRUCTURES

The Contractor shall construct cleanouts where shown on the plans and as specified. All backfill around and above the pipe shall be machine tamped in layers not exceeding 3-inches in depth so that no settlement shall occur after the cleanout is constructed. Cleanouts shall be provided at each service connection and located at the edge of an easement or at the right-of-way. The cleanouts shall be enclosed within a round plastic box which has a lid that makes the cleanout accessible, set flush with the ground. Cleanout shall include a brass plug (City of Bryan only).

G. DROP MANHOLES

Drop manholes shall be constructed for elevation differences of 24 inches or greater as measured from the flow line of the pipe to the flow line entrance of the manhole and constructed in a manner that will allow the water from the drop to drop in the flow line of the intersecting sewer.

END OF SECTION

SECTION 33 39 14

SEWER SERVICES

(Sentences and/or paragraphs that are double underlined indicate revisions that were made from the 2009 specification.)

PART 1 - GENERAL

1.1 DESCRIPTION

A. This section describes the manufacture, construction, and installation of sewer services for ordinary sewer service.

1.2 MEASUREMENT AND PAYMENT

A. Services shall be categorized as "long" if over 15-feet in length or "short" if 15-feet or shorter and measured as "EACH" or as provided in the Bid Proposal Form.

B. Payment will be made at the unit price bid per each for furnishing and installing services. This unit bid price will include all costs for the complete service installation, including all appurtenances, bedding, marking, cleanouts, and testing.

1.3 SUBMITTALS

A. Submit manufacturer's data on materials furnished, indicating compliance with the specifications regarding dimensions, thickness, weights, and materials.

B. Submit manufacturer's "Certificate of Compliance", stating that the materials furnished comply with this specification.

PART 2 – PRODUCTS

2.1 MATERIALS

All materials shall be as shown on the details.

PART 3 – EXECUTION

3.1 GENERAL

A. INSTALLATION

Information supplied by the manufacturers on any and all appurtenances should be reviewed in detail before installation of the service. At the job site, prior to installation, the material should be visually inspected and any foreign material in the interior portion of the service should be removed. A detailed inspection of the service should be performed prior to installation.

B. The services should be bedded in a fashion similar to bedding main lines as shown on the details. Cleanouts shall be provided at each service connection and located at the edge of an easement or at the right-of-way. The cleanouts shall be enclosed within a round plastic box which has a lid that makes the cleanout accessible, set flush with the ground. Cleanout shall include a brass plug (City of Bryan only).

END OF SECTION

SECTION 33 39 14.01

CONNECTION OF NEW LINES TO EXISTING MANHOLES

PART 1 - GENERAL

1.1 DESCRIPTION

A. This item shall govern for the connecting of new sewer lines to existing manholes, where so indicated on the Plans or as directed by the Engineer.

1.2 MEASUREMENT AND PAYMENT

A. Connecting new sewer lines to existing manholes will be paid for at the unit price bid in the Proposal for each connection made. The price will be full remuneration for making the connection complete, including cutting the hole in the manhole, shaping the bottom of the manhole of necessary, grouting the pipe and including the furnishing of all equipment, labor, materials, power, tools, and incidentals necessary to complete the work, except the pipe.

PART 2 – PRODUCTS

N/A

PART 3 – EXECUTION

3.1 GENERAL

A. Where new sewer lines are to be connected to existing manholes, holes of the proper size and at the proper location shall be cored into the existing manholes. Where it is necessary to provide a smooth flow through the manhole, the bottom of the manhole shall be shaped to conform to the bottom of the pipe as directed by the Engineer.

B. Other methods in lieu of coring may be used and should be discussed with the City Engineer prior to performing. The City Inspector should be notified at the beginning of either of these processes.

C. If the manhole can not satisfactorily be cored due to its condition, a hole shall be cut into the existing manhole. The sewer pipe shall be inserted into the hole cut in the manhole so that the end of the pipe will be flush with the inside of the manhole and the pipe shall be made smooth and water-tight with a Type "A" mortar.

END OF SECTION

SECTION 33 11 13.1

WATER MAIN CONSTRUCTION

(Sentences and/or paragraphs that are double underlined indicate revisions that were made from the 2009 specification.)

PART 1 – GENERAL

1.1 DESCRIPTION

A. This item shall govern the construction of water mains including trenching, backfilling, pipe-laying, coupling, testing, the setting of fittings, valves and valve boxes, fire hydrants, appurtenances and wet connections. All work is to be done in accordance with the plans and specifications and paid for in accordance with the schedule of prices submitted in the Proposal.

1.2 RELATED ITEMS

See:
SECTION 31 78 00 - PIPE BORING, JACKING, & TUNNELING
SECTION 03 30 01 - CONCRETE BLOCKING OR ANCHORAGE
SECTION 31 23 33 - EXCAVATING, TRENCHING, & BACKFILL
SECTION 33 05 01 - PVC PIPE & FITTINGS
SECTION 33 05 02 - DUCTILE IRON PIPE
SECTION 33 12 16 - VALVES
SECTION 33 12 19 - FIRE HYDRANTS
SECTION 33 12 13 - WATER SERVICES

1.3 MEASUREMENT AND PAYMENT

A. PIPE: Payments will be made at the price bid per foot for furnishing and installing pipe, which bid price will include all costs for the complete pipe installation including trenching, and backfill, embedment, compaction or tamping, sterilization, testing, final cleanup, and all other work not otherwise provided for in bid proposal. Pipe will be measured (by horizontal distance) from center of fitting to center of fitting, or end of pipe without deduction for the length of intermediate fittings or valves.

B. FITTINGS: Payment will be made at the unit price bid per each for furnishing and installing fittings and joint accessories. Fittings will be measured per each.

C. THRUST BLOCKING: Thrust blocking shall not be a measured item.

D. SERVICES: Services shall be measured per each. Payment for each service will include the furnishing and installing pipe, which bid price will include all costs for the complete pipe installation, including line fittings, trenching, and backfill, embedment, compaction or tamping, sterilization, testing, final cleanup, and all other work not otherwise provided for in bid proposal. See Detail or SECTION 33 12 13 – WATER SERVICES for supplementary information.

1.3 SUBMITTALS

All submittal requirements are listed with the material specifications

PART 2 – PRODUCTS

2.1 TESTING REQUIREMENTS

See: SECTION 33 13 10 - HYDROSTATIC TESTING (Used for Waterlines & Sanitary Sewer Force Mains)
SECTION 33 13 00 - DISINFECTION OF WATERLINES

PART 3 – EXECUTION

3.1 GENERAL

Construction methods for each material are specified in the material specifications.

A. MINIMUM COVER: The minimum cover for water pipe shall be four feet (4') as measured from the outside top of the pipe vertically to finished ground or pavement surface elevation. The maximum cover shall be 5 feet (5').

END OF SECTION

SECTION 33 12 13

WATER SERVICES

(Sentences and/or paragraphs that are double underlined indicate revisions that were made from the 2009 specification.)

PART 1 - GENERAL

1.1 DESCRIPTION

A. This section describes the manufacture, construction, and installation of water services for ordinary waterworks service.

1.2 MEASUREMENT AND PAYMENT

A. Services shall be categorized as "long" if over 15-feet in length or "short" if 15-feet or shorter and measured as "EACH" or as provided in the Bid Proposal Form.

B. Payment will be made at the unit price bid per each for furnishing and installing services. This unit bid price will include all costs for the complete service installation, including all appurtenances, bedding, marking, testing, and disinfection.

1.3 SUBMITTALS

A. Submit manufacturer's data on materials furnished, indicating compliance with the specifications regarding dimensions, thickness, weights, and materials.

B. Submit manufacturer's "Certificate of Compliance", stating that the materials furnished comply with this specification.

PART 2 – PRODUCTS

2.1 MATERIALS

All materials shall be as shown on the details. Service saddles for PVC and Ductile Iron shall be Smith Blair No. 317 stainless steel, Ford S70/S90 hinged, or Cambridge 800 series. All standard service lines shall be Type 'K' Copper. Tapped tee connection shall be ductile iron C153 MJ fitting.

The components for service connections shall be as listed in the following table.

Description	1-inch service	1.5-inch service	2-inch service
Corporation Stops	FB-1000-4*	FB-1000-6*	FB-1000-7*
Ball Straight Stops	B11-444-W	B11-666-W	B11-777-W
Angle Ball Curb Stops (for City of Bryan only)	BA13-444-W*	BA11-666-W	BA11-777-W
Angle Ball Curb Stops (for City of College Station only)	BA43-444W	FV43-666W	FV43-777W

Wye for double service to be Y44-264*
Part numbers listed are Ford part numbers.
*City of Bryan requires Quick Grip fittings (Q); City of College Station requires Pack Joint fittings

Service Saddles

Description	**Bryan**	**COCS**
Smith Blair 317 SS	Approved	
Cambridge 800 Series		Approved
Ford S70/S90		Approved

PART 3 – EXECUTION

3.1 GENERAL

A. INSTALLATION

Information supplied by the manufacturers on any and all appurtenances should be reviewed in detail by the Contractor before installation of the service. At the job site, prior to installation, the material should be visually inspected and any foreign material in the interior portion of the service should be removed. A detailed inspection of the service should be performed prior to installation.

Service connections shall be tapped tees in curved sections of pipe.

B. The services should be bedded in a fashion similar to bedding main lines as shown on the details.

END OF SECTION

SECTION 33 12 16

MAIN LINE VALVES

(Sentences and/or paragraphs that are double underlined indicate revisions that were made from the 2009 specification.)

PART 1 - GENERAL

1.1 DESCRIPTION

A. This section describes the manufacture, construction, and installation of waterline valves for ordinary waterworks service.

1.2 MEASUREMENT AND PAYMENT

A. GATE VALVES

Gate valves will be measured by the each.

Payment will be made at the unit price bid per each for furnishing and installing gate valves, which bid price will include all costs for the complete gate valve installation, including extension stems, valve boxes, concrete blocking, testing, and disinfection.

B. APPURTENANCES

Operator extensions, valve boxes, brass plug valves, manholes, and concrete blocking will not be measured items.

1.3 SUBMITTALS

A. Submit manufacturer's data on materials furnished, indicating compliance with the specifications regarding dimensions, thickness, weights, and materials.

B. Submit manufacturer's "Certificate of Compliance", stating that the materials furnished comply with this specification.

1.4 INSPECTION, STORAGE, AND HANDLING

A. All valves should be unloaded carefully. The valve should be carefully lowered from the truck to the ground, not dropped. In the case of larger valves, fork trucks or slings around the body of the valve or under the skids should be used for unloading. Only hoists and slings with adequate load capacity to handle the weight of the valve or valves should be used. Do not hook hoists into or fasten chains around bypasses, yokes, gearing, motors, cylinders, or handwheels.

B. Valves should be inspected at the time of receipt for damage in shipment. The initial inspection should verify compliance with specifications, direction of opening, size and shape of operating nut, number or turns, and type of end connections. A visual inspection of gate rings and body rings should be performed to detect any damage in shipment or scoring of the seating surfaces. Inspection personnel should look for bent stems, broken handwheels, cracked parts, missing parts and accessories, and any other evidence of mishandling during shipment. The valve should be cycled through one complete opening-and-closing cycle. All valves sixteen (16") inches and larger should be operated through one full operating cycle in the position in which they are to be installed.

C. Valves should be stored in the fully closed position to prevent entry of foreign material that could cause damage to the seating surfaces. Whenever practical, valves should be stored indoors. If outside storage is required, means should be provided to protect the operating mechanisms, such as gears, motor operators, and cylinders, from the weather and foreign materials. If valves may be subject to freezing temperatures, remove water from the valve interior and close the gates tightly before storage. Valves in outside storage in cold climates should be stored with the discs in a vertical position; if the discs are in a horizontal flat position, rain water can accumulate on top of the top disc, seep into the valve body cavity, freeze, and crack the casting. Any valves damaged by weather will not be installed.

PART 2 – PRODUCTS

2.1 MATERIALS

A. APPLICABLE STANDARDS

1. AWWA – C110, C111
2. ASTM – A48, C33, C150 and C478

B. GATE VALVES

All gate valves up to and including thirty (30”) inch shall conform to the current AWWA C515 standard. All valves shall be ductile iron body, resilient seat nonrising stem, internal wedging type and new. All gate valves shall have a square nut operated valve turning clockwise to close. Brass nut is not allowed. Valves shall have a working pressure rating of 250 psi.

1. Resilient-Seated Gate Valves per AWWA C515

a.) *General*

All valves up to and including thirty (30”) inch shall have a bronze stem, resilient-seated disc, drip tight shutoff. Valves shall be manufactured by American Flow Control Series 2500 or Clow Model No. 2638 and be “Resilient Seated” (Powder Coated).

b.) *Gates, Rings and Disc*

All gates shall be cast-iron with internally reinforced, molded rubber disc seat rings. All gate valves shall be manufactured with a modified wedge disc with steel reinforced, natural rubber disc seat ring. Disc shall slide on a vertical, machined guide surface and shall seat on a sloped, machined seating surface. Valves shall be tested for leakage per AWWA C515, Section 6.1.6.

c.) Gate valves twelve (12”) inches or smaller will be installed seated on a minimum of one (1) 12”x12”x 4” solid concrete blocks. Valves larger than 12” will be seated by a poured-in-place concrete saddle. The size of this saddle is as shown on the plans.

2. Stuffing Boxes

All valves up to and including sixteen (16”) inches shall be equipped with double O-rings, provided arrangement is made for replacement under pressure of the upper O-ring when the valve is fully open. All geared valves will be equipped with conventional packing in the main stuffing box. Valves shall be installed in a vertical position. Stuffing box and bonnet bolts and nuts shall be 304 stainless steel.

3. Operating Nuts

   All valves shall be square nut operated. All valves shall open by turning to the left (counter clockwise). Operator nuts shall be two (2") inch square.

4. Miscellaneous Requirements

   a.) All exposed bolts, nuts, etc., for valves to be buried, shall be stainless steel. Cadmium plated bolts, nuts, etc., will not be accepted.

   b.) A valve nut extension will be installed to maintain 4' bury to operating nut when the operating nut is located 5' or more below finished grade after valve installation.

D. VALVE ENDS

1. Valves shall have mechanical joint ends. Mechanical joint ends shall conform to AWWA C111. Flanged ends shall conform to ASA B16.1, Class 125 lb. (unless otherwise noted).
2. Bolts and nuts for mechanical joints will be of high-strength low-alloy corrosion resistant steel and conform to AWWA C111. All mechanical joint glands will be ductile iron.
3. Bolts and nuts for flanged ends buried in the ground shall be Type 304 stainless steel.

E. OPERATOR EXTENSION SHAFTS

Operator extension shafts are required on all valves when the operating nut is over five (5') feet below finished grade. Extension shaft is to bring the operating nut to within four (4') to five (5') feet of the top of the valve box. Extension shaft shall have a centering collar placed directly below operating nut and shall be bolted to valve operating nut with stainless steel set screw.

F. VALVE BOXES

A valve box shall be furnished and installed over each underground valve. The boxes shall be cast iron of the two-piece screw type, with a shaft diameter of not less than five and one-fourth inches (5-1/4") and shall have the word "WATER" stamped on the lid. Provide extension stem for all buried valves terminating in a standard 2-inch square AWWA nut within four (4') to five (5') feet of valve box cover. All parts of the valve box, base and cover shall be coated with hot bituminous varnish. The box shall be furnished complete with cast iron cover and yoke to fit over the valve body. Concrete valve box collars (24"x24"x6") shall be installed with each gate valve. Valve boxes are to be installed plumb and adjusted to their proper grade by the Contractor.

G. BRASS PLUG VALVES

One-half (1/2") inch through two (2") inch plug valves, when shown on the plans or required, shall be of all brass construction, and warranted for a water working pressure of 200 pounds per square inch. Brass plug valves smaller than two (2") inches shall be Mueller Oriseal, or pre-approved equal. Two (2") inch brass plug valves shall be Ford B11-777W or Mueller H-10284, or pre-approved equal.

H. CONCRETE

Cement shall conform to ASTM C150, Type 1. Aggregates shall conform to ASTM C33. Twenty-eight (28) day compressive strength shall equal or exceed 3,000 psi.

PART 3 – EXECUTION

3.1 INSTALLATION

A. Any and all instruction manuals supplied by the manufacturers should be reviewed in detail before installation of the valve. At the job site, prior to installation, the valve should be visually inspected and any foreign material in the interior portion of the valve should be removed. A detailed inspection of the valve should be performed prior to installation.

1. All bolts should be protected to prevent corrosion, either with a suitable paint or by polyethylene wrapping.
2. During installation, there exists the possibility of foreign materials inadvertently entering the valve. Valves should be installed in the closed position. The valve shall be seated on a minimum of one (1) 12”x12”x 4” solid concrete blocks. Valves larger than 12” will be seated by a poured-in-place concrete saddle in the trench to prevent settling and excessive strain on the connection to the pipe. Size of this saddle shall be shown on the plans.
3. A valve box or vault should be provided for each valve used in a buried service application. The valve box should be installed so as not to transmit shock or stress to the valve. The valve box should be centered over the operating nut of the valve, with the box cover flush with the surface of the finished area, or such other level as directed by the City. Valve boxes should be of such a design that a traffic load on the top of the box is not transmitted to the valve.
4. Valves buried in unusually deep trenches shall have extension stems for operating the valve.

B. Valves installed above ground or in plant piping systems should be supported in such a way as to minimize bending of the valve end connections as a result of pipe loading.

C. After installation and before pressurization of the valve, all pressure-containing bolting (bonnet, seal plate, bypass, and end connections) should be inspected for adequate tightness to prevent leakage. In addition, an inspection should be made for adequate tightness to prevent leakage. In addition, an inspection should be made for adequate tightness of all tapped and plug openings to the valve interior. Proper inspection at this time will minimize the possibility of leaks after pressurization of the piping system.

D. In order to prevent time lost searching for leaks, it is recommended that valve excavations not be backfilled until after pressure tests have been made.

1. If valves are used to isolate test section, the test pressures should not exceed twice the rated working pressure of the valve. After the test, steps should be taken to relieve any trapped pressure in the body of the valve. The valve should not be operated in either the opening or closing direction at differential pressures above the rated working pressures.

E. Upon completion of the installation, valve location, size, make, type, date of installation, and other information deemed pertinent should be entered on permanent records and given to the Engineer.

F. Valves should not be installed in applications or for service other than those recommended by the manufacturer.

1. Valves should not be installed in lines where service pressure will exceed the rated working pressure of the valve.
2. Mainline valves shall not be used for throttling service, unless the design is specifically recommended for that purpose or approved in advance by the manufacturer and Engineer.
3. Valves should not be used in applications for water distribution that is exposed to subfreezing temperatures unless sufficient flow is maintained through the gate valve to prevent freezing, or some other type of protection is provided to prevent freezing.
4. Valves should not be installed at the dead end of a pipeline without proper and adequate restraint to support the valve and prevent it from blowing off the end of the line. No concrete shall be used on the valve for blocking.
5. To prevent damage to the valve, gate valves, up to and including sixteen inches (16") in diameter shall not be operated with input torques greater than 300 ft-lbs. .

END OF SECTION

SECTION 33 12 19

FIRE HYDRANTS

(Sentences and/or paragraphs that are double underlined indicate revisions that were made from the 2009 specification.)

PART 1 - GENERAL

1.1 DESCRIPTION

This section describes the manufacture, construction, and installation of fire hydrants.

1.2 MEASUREMENT AND PAYMENT

A. FIRE HYDRANTS

Fire hydrants will be measured by the each as shown on the plans.

Payment will be made at the unit price bid per each for furnishing and installing fire hydrants, which bid price will include all costs for the fire hydrant installation, (excluding TEE), hydrant piping and fittings, hydrant gate valve, extension stems, valve boxes, concrete blocking, testing, disinfection, and all other work not otherwise provided for in the Proposal. The main line fitting is not included in the cost of the fire hydrant.

B. APPURTENANCES

Operation extensions, valve boxes, gate valves, mainline fittings, hydrant piping and fittings, anchor couplings, and concrete blocking will not be measured items and shall be considered subsidiary.

1.3 SUBMITTALS

A. Submit manufacturer's data on fire hydrants to be furnished indicating compliance with the specifications especially regarding dimensions, materials of construction, and nozzle threads.

B. Submit manufacturer's "Certificate of Compliance" stating that the materials furnished comply with the specifications.

C. Upon request, flow data, indicating friction loss in PSI at the flow of 1,000 GPM from the pumper nozzle, such friction loss must not exceed 3 PSI. ISO 9001 certification.

PART 2 – PRODUCTS

2.1 APPLICABLE STANDARDS

A. AWWA –C110, C111, C502, and C600

B. ASTM – C33 and C105

2.2 GENERAL

A. All fire hydrants furnished shall conform to the requirements and test of AWWA C502-94 Standard for Dry Barrel Fire Hydrant or latest version thereof, as they pertain to the design, component materials, construction and manufacture, except as modified or supplemented hereinafter. Fire hydrants shall have a published warranty against defects in material or

workmanship for a period of ten (10) years from date of manufacture. Acceptable fire hydrants shall be American Flow Control 5-1/4" B-84-B and Clow Medallion.

1. Pressure rating -- working pressure shall be 250 psig tested to 500 psig hydrostatic pressure.
2. Flow -- friction loss shall not exceed 3.0 psig at a flow of 1000 gpm through the pumper nozzle connection when tested as prescribed in AWWA C-502 latest revision. This test must be conducted by an independent laboratory in their facility and attested to by a Professional Engineer. Documentation must accompany all requests for hydrant approval.
3. Drain valve -- must drain the barrel when the hydrant is closed, and seal shut when hydrant is opened.
4. Seat ring and Drain ring (show bushing) – must be bronze (ASTM B-62), shall work in conjunction to form an all bronze drain way, and shall have no less than two (2) openings. If they are in a cast iron shoe, they must be bronze lined and the bronze seat ring must thread into bronze drain ring (or shoe bushing) providing bronze to bronze connection. Seat rings must be "O" rings. The 6" shoe connection must be specified (flanged, A/C, M.J, etc.) having ample blocking for sturdy setting. A minimum of eight (8) bolts and nuts is required to fasten the shoe to the lower barrel.
5. Main valve – compression type closing with the pressure and must be not less than 5-1/4" in diameter. Composition of the main valve must be molded rubber or neoprene, having a durometer hardness of 95 (+) (-) 5 and must be not less than 1" thick.
6. Outlet – "Three-way" having two (2) 2-1/2" hose nozzles and one (1) 4-1/2" I.D. pumper nozzle; all National Standard Hose Coupling Thread. All nozzles shall be bronze and thread counter clockwise into the nozzle section with "O" ring pressure seals and held in place with an acceptable locking device
7. Hydrant barrel casting – inside diameter of the hydrant barrel shall not be less than six and one-eighth inches (6-1/8").
8. Operating nut – Non-rising, pentagonal in shape, measuring 1-1/2" from point to flat at base of nut; bronze.
9. Hold-down nut – Shall incorporate an integral resilient weather seal and open counter clockwise.
10. Lubrication chamber - Must be provided with sealed top and bottom "O" rings, filled with lubricant which shall be either oil or grease, designed with thrust collar and threaded operating parts that are automatically lubricated each time the hydrant is cycled. There must not be less than two (2) "O" rings separating the lubrications reservoir from the waterway and that portion of the stem contracting these "O" rings shall be sleeved with bronze. An anti-friction device must be in place above the trust collar to further minimize operating torque.
11. Hydrant bonnet – must be attached to the upper barrel by not less than four (4) bolts and nuts, with an inserted flat rubber gasket as a pressure sea.
12. Direction to open – counter clockwise.
13. Operating stem – must be two-piece, not less than 1-1/4" diameter or 1" x 1" square (excluding threaded or machined areas) and must be connected by a breakable stem coupling near the ground line flange. Screws, pins, bolts or fasteners used in conjuction with the stem coupling must be stainless steel.
14. Exterior paint – red machinery enamel.

B. ADDITIONAL REQUIREMENTS

1. Breakable Type Construction

Hydrants shall be traffic-model type having upper and lower barrels joined approximately two inches (2") above the ground line by a separated and breakable "swivel" flange providing 360 degree rotation of the upper barrel for proper nozzle facing. This flange must employ not less than eight (8) bolts.

2. Provisions for Extension

All hydrants shall be capable of being extended to accommodate future grade changes without excavation. Compression type hydrants that close with the flow shall have breakable type stem coupling installed at the ground line flange. Extension of this type hydrant shall be made by adding at the ground line flange, a new coupling and stem section equal to the length of the extension. Stem extensions made by adding a new section of stem to the threaded section of the stem at the top of the hydrant will not be accepted. Only one extension is allowed.

3. Bury Length

Furnish hydrants for a four (4') foot bury unless the water line grades shown on the plans indicate a deeper bury is required.

4. Operating Stems

Operating stems whose threads are located in the barrel or waterway shall be of manganese bronze, Everdur, or other high quality non-corrodible metal, and all working parts in the waterway shall be bronze to bronze.

Operating stems whose threads are not located in the barrel or waterway may be made of high-grade bronze, genuine wrought iron, or steel, and stem nuts shall be bronze. Iron or steel stems shall have a bronze, stainless steel, or other non-corrodible metal, sleeve where passing through "O"-rings. Operating threads must be sealed against contact with the water at all times regardless of open or closed position of the main valve.

The operating mechanism, safety stem coupling and main valve assembly shall be capable of withstanding 200 ft-lbs of torque against the fully open or closed positions, with no damage to the components. Downward stem travel shall be limited in the bottom of the hydrant by a one-piece lower valve plate that bottoms out in the hydrant shoe. Travel stops located in the bonnet or upper valve plate is unacceptable. The interior and the exterior of the hydrant shoe shall be fully coated with not less than 8 mils of fusion bonded epoxy.

5. Main Valve Seats

Main valve seats on compression type hydrants closing with the flow shall be of such design that incorrect positioning is impossible and that the threads will be adequately guided into position. Arrangements shall also be made to hold the main valve gasket in place during assembly. The main seat shall be made of bronze and threaded into a heavy bronze bushing in the hydrant base.

6. Seat and Drain Ring

The bronze seat shall thread directly into a bronze drain ring. This will assure easy removal of the main valve seat through the top of the hydrant shoe and all pressure seals must be "O"-rings.

7. Hydrant Heads

   The hydrant shall be constructed so that the nozzles may be faced in any desired direction.

8. Mating Surfaces

   All mating surfaces, such as bonnet-to-nozzle section, nozzle section-to-lower barrel, lower barrel-to-shoe, must utilize rubber gaskets for sealing and must be held in place by zinc-plated bolts and nuts. Other methods, such as snap rings, etc., will not be accepted.

9. Manufacturer Experience Record

   No hydrant will be considered which has not been regularly manufactured and in successful continuous use for at least 10 years.

C. ACCESSORIES REQUIRED

1. Full face ground line flange gaskets.
2. Nozzle cap gaskets
3. Drain valve and outlet
4. Cap nuts to seal the bottom end of stem threads against contact with water
5. Harnessing lugs (Required only when shown on the plans.)

2.2 TESTING REQUIREMENTS

See SECTION 33 13 10 – HYDROSTATIC TESTING and SECTION 33 13 00 – DISINFECTION OF WATERLINES.

PART 3 – EXECUTION

3.1 CONSTRUCTION METHODS

A. Fire hydrant leads 18' or shorter will be restrained the entire length. Fire hydrant leads shall require a separate valve for the fire hydrant assembly. If main line valve is within 50' of fire hydrant, then assembly valve may be omitted on a dead end hydrant lead with no additional connections.

B. Place fire hydrants at all locations shown on the plans, or as directed by the Engineer.

C. Set each fire hydrant upon a concrete slab not less than four inches (4") thick and not less than one (1) square foot of surface area.

D. Place eight (8) cubic feet of crushed rock, clean gravel or other suitable material to provide reservoir capacity so that the hydrant will completely drain when closed.

E. Set the hydrant perpendicular with large steamer nozzle facing nearest curb, and at a depth such that the center of the steamer nozzle is not less than eighteen inches (18"), nor more than twenty-four inches (24") above nearest grade. Assure that the hydrant is sat at the bury line.

F. Contractor shall remove the chains from the steamer nozzles prior to final project inspection.

G. Polyethylene encasement of 8 mils thick shall be installed on all piping and appurtenances in contact with soil and shall conform to AWWA C105. Joint tape shall be self sticking PVC or polyethylene, 8 mils thick.

END OF SECTION

SECTION 33 13 00

DISINFECTION OF WATERLINES

PART 1 - GENERAL

1.1 DESCRIPTION

A. This specification specifies the procedure for disinfection of water systems, and in general, conforms to AWWA C651, Disinfecting Water Mains including Section 4.3.9.

1.2 MEASUREMENT AND PAYMENT

A. Disinfection of waterlines will not be measured. Cost for work herein specified, including the furnishing of all materials, equipment, tools, labor and incidentals necessary to complete the work, shall be included in the unit price bid for waterlines in the Proposal.

PART 2 – PRODUCTS

2.1 MATERIALS

A. CHLORINE AND WATER

1. Chlorine

   Calcium hypochlorite, or equal, which contains sixty-five (65%) percent chlorine by weight.

2. Water

   Water for disinfection will be metered and furnished to the Contractor at no cost. Existing water lines are to remain isolated from newly laid water lines by a physical air gap until the original copy of the negative coliform test results have been received by the City Engineer from either the County Health Department or an approved TCEQ lab.

2.2 TESTING REQUIREMENTS

A. CHLORINE RESIDUAL-DROP DILUTION METHOD

The drop dilution method of approximating total residual chlorine is suitable for concentrations above 10 mg/L, such as are applied in the disinfection of water mains or tanks.

1. Apparatus

   a.) A graduated cylinder for measuring distilled water.

   b.) An automatic or safety pipet

   c.) A dropping pipet that delivers a one-milliliter (1 ml) sample in twenty (20) drops. This pipet is for measuring the water sample and should not be used for any other purpose.

   d.) A comparator kit containing a suitable range of standards.

2. Procedure

   a.) Ascertain the volume of the comparator cell and using an automatic or safety pipet, add 0.5 ml of orthotolidine for each 9.5 ml of distilled water to be added.

b.) Using a graduated cylinder, add a measured volume of distilled water.

c.) With the dropping pipet, add the water sample a drop at a time, allowing mixing, until a yellow color is formed that matches one of the color standards.

d.) Record the total number of drops used and the final chlorine value obtained.

e.) Calculate the milligrams per liter residual chlorine as follows:

i. Multiply by twenty the number of milliliters of distilled water used in Step 2.

ii. Multiply product in step a. by the final chlorine value in milligrams per liter recorded in Step 4.

iii. Divide the product found in step b. by the total number of drops of water sample recorded in Step 4.

PART 3 – EXECUTION

3.1 GENERAL

A. During the construction operations, workmen shall be required to use utmost care to see that the inside of pipes, fittings, jointing materials, valves, etc., which will come into contact with potable water be maintained in a sanitary condition.

B. Every effort must be made to keep the inside of the pipe, fittings, and valves free of all foreign matter, sticks, dirt, rocks, etc. As each joint of pipe is being laid, it must be effectively swabbed so that all foreign matter is removed. Placing dry powdered chlorine in the pipeline will be permitted in conjunction with certain methods of sterilization as specified by the Engineer. All fittings and exposed open ends of pipe must be blocked with a plug or capped until the line is completed.

C. Sterilization of the line, or any section thereof, shall not be commenced until the Engineer has approved the method, apparatus, sterilizing agent, and the section of the line.

D. When the entire pipeline, or certain section thereof, has been completed, tested, and made ready for use, the line or section of line shall be thoroughly sterilized according to the following procedure:

1. The Contractor shall provide all necessary taps to complete this section of the specifications.

2. The water main shall be flushed prior to disinfection.

3. The flushing velocity shall be greater than 2.5 feet per second. The rate of flow required to produce this velocity in various diameters is shown in Table 1. No site for flushing should be chosen, unless it has been determined by the Engineer or Inspector that drainage is adequate at that site. Flushing is no substitute for preventive measures taken before and during pipe laying. Certain contaminants, especially in caked deposits, resist flushing at any velocity.

TABLE 1

REQUIRED OPENINGS TO FLUSH PIPELINES (40 PSI RESIDUAL PRESSURE)

Pipe Size	Flow (gpm) Required to Produce 2.5 fps Velocity	Orifice Size (in.)	Number of Hydrant Outlet Nozzles	Size (in.) of Hydrant Outlet Nozzles
4	10	15/16	1	2-½
6	220	1-3/8	1	2-½
8	390	1-7/8	1	2-½
10	610	2-5/16	1	2-½
12	880	2-13/16	1	2-½
14	1200	3-¼	2	2-½
16	1565	3-5/8	2	2-½
18	1980	4-3/16	2	2-½

Note: A 2-½" hydrant outlet nozzle will discharge approximately 1,000 gpm and a 4-½" hydrant outlet nozzle will discharge approximately 2,500 gpm with 40 psi residual pressure.

E. METHODS OF CHLORINE APPLICATION

1. Continuous Feed Method

Note: This method is suitable for general applications.

a. Water from the existing distribution system, or other pre-approved sources of supply, shall be made to flow at a constant, measured rate into the newly laid pipeline. The water shall receive a dose of chlorine concentration until the water in the pipe maintains a minimum of fifty milligrams per liter (50 mg/1) available chlorine. To assure that this concentration is maintained, the chlorine residual should be measured at regular intervals in accordance with the procedures described herein.

Note: In the absence of a meter, the rate may be determined either by placing a pitot gauge at the discharge, or by measuring the time to fill a container of known volume.

Table 2 gives the amount of chlorine residual required for each 100 feet of pipe of various diameters. Solutions of one percent (1%) chlorine may be prepared with approximately one pound (1 lb.) of calcium hypochlorite (65% strength) in 8.5 gallons of water.

TABLE 2
Chlorine Required to Produce 50 Mg/1
Concentration in 100 feet of Pipe
by Diameter

Pipe Size (in.)	100% Chlorine (lb/100ft)	1% Chlorine Solution (gal/100ft)
4	0.027	0.33
6	0.061	0.73
8	0.108	1.30
10	0.170	2.04
12	0.240	2.88
16	0.427	5.12
18	0.540	6.48
24	0.960	11.50

Pipe Size (in.)	100% Chlorine (lb/100ft)	1% Chlorine Solution (gal/100ft)
30	1.500	18.00
36	2.160	25.90
42	2.940	35.30

b. During the application of the chlorine, valves shall be manipulated to prevent the treatment dosage from flowing back into the line supplying the water. Chlorine application shall not cease until the entire main is filled with the chlorine solution. The chlorinated water shall be retained in the main for at least twenty-four (24) hours during which time, all valves and hydrants in the section treated shall be operated in order to disinfect the appurtenances. At the end of this twenty-four (24) hour period, the treated water shall contain no less than fifty (50) milligrams per liter and no more than one hundred (100) milligrams per liter chlorine throughout the length of the main. A dosage of more than the maximum allowable chlorine will require the Contractor to dilute the flush water with one of the TCEQ approved dilution chemicals. The chemical and description of procedure will be submitted in writing to the Engineer for approval.

2. Slug Method

This method is suitable for use with mains of large diameter for which, because of the volume of water involved, the continuous feed method is not practical.

a.) Water from the existing distribution system shall be made to flow at a constant, measured rate (see C.1.a. Note) into the newly laid pipeline. The water shall receive a dose of chlorine, also fed at a constant, measured rate. The two (2) rates shall be proportioned so that the concentration of the water entering the pipeline is maintained at no less than 300 milligrams per liter. As the chlorinated water passes along the line, it shall expose all interior surfaces to a concentration of at least 300 mg/L for at least three (3) hours. The application shall be checked at a tap near the upstream and downstream end of the line by chlorine residual measurements made according to the procedures described herein.

b.) As the chlorinated water flows past tees and crosses, related valves and hydrants shall be operated so as to disinfect appurtenances.

3. Dry Treatment during Installation

The dosage and application of sodium hypochlorite will be determined by the following:

a.) Calculate weight of sodium hypochlorite required for water to be treated utilizing Table 2.

b.) Add required amount of solution at the bell of each pipe as it is installed.

E. FINAL FLUSHING

After the applicable retention period, the heavily chlorinated water shall be flushed from the main until the chlorine concentration in the water leaving the main is less than three milligrams per liter (3 mg/1). Chlorine residual determination shall be made by the Inspector to ascertain that the heavily chlorinated water has been removed from the pipeline.

F. BACTERIOLOGIC TESTS

1. Before the water main is placed in service, a sample or samples shall be collected from points designated by the Inspector and tested for bacteriologic quality. This sample shall be collected 24 hours after final flushing. The test shall show the absence of coliform organisms before the water main may be placed in service. At least one (1) sample per one thousand (1000) feet of new line or portion thereof shall be taken. Sampling shall be supervised by the Inspector. Samples shall be submitted by the city to a TCEQ approved laboratory and/or County Health Department for analysis.

2. Samples of bacteriologic analysis shall be collected in sterile bottles obtained from the Brazos County Health Department. Samples shall be collected at points specified by the City Engineer.

3. A suggested sampling tap consists of a standard corporation cock installed in the main with a copper tube gooseneck assembly. After samples have been collected, the gooseneck assembly may be removed and retained for future use.

G. REPETITION OF PROCEDURE

1. If the initial disinfection fails to produce samples with no coliform present, the contractor shall re-disinfect the line following the procedures stated in 695.04 of this specification until samples indicating no coliform present have been obtained. When the samples indicate no coliform present and the City Engineer has received original copies of the test report, the main may be placed in service.

3.2 PROCEDURE AFTER CUTTING INTO OR REPAIRING EXISTING MAINS

A. The procedure outlined in this section applies primarily when mains are wholly or partially dewatered. Leaks or breaks that are repaired with clamping devices while the mains remain full of water under pressure present little danger of contamination and require no disinfection.

1. Trench "Treatment"

When an old line is opened, either by accident or by design, the excavation will likely be wet and badly contaminated. Liberal quantities of hypochlorite applied to open trench areas will lessen the danger from such pollution. Tablets have the advantage in such a situation because they dissolve slowly and continue to release hypochlorite as water is pumped from the excavation.

2. Main Disinfection

a.) *Swabbing and Flushing.* The following procedure is considered as a minimum that may be used.

i. Swabbing With Hypochlorite Solution: The interior of all pipe and fittings used to make the repair (particularly couplings and tapping sleeves) shall be swabbed with a 5 percent hypochlorite solution before they are installed.

ii. Flushing: Thorough flushing is the most practical means of removing contamination introduced during repairs. If valving and hydrant locations permit, flushing from both directions is recommended. Flushing shall be started as soon as the repairs are completed and continued until discolored water is eliminated.

3. Slug Method: In addition to the swabbing and flushing procedures of section B.1., the section of main in which the break is located can be flushed and chlorinated using the slug method where practical, as determined by the Engineer or Inspector. This method requires isolating the section of main, shutting off all service connections, flushing the main, and chlorinating the main as described in the Slug Method in C.2, except that the dose may be increased to as much as 500 mg/1, and the contact time reduced to as little as ½ hour. After chlorination, flushing shall be resumed and continued until discolored water is eliminated.

4. Sampling: Bacteriologic samples shall be taken after repairs to provide a record by which the effectiveness of the procedures used can be determined by the Inspector. If the direction of flow is unknown, samples shall be taken on each side of the main break.

END OF SECTION

SECTION 33 13 10

HYDROSTATIC TESTS

PART 1 - GENERAL

1.1 DESCRIPTION

This item shall consist of the hydrostatic testing of all waterlines, fire hydrants, and appurtenances.

1.2 MEASUREMENT AND PAYMENT

Testing of waterlines will not be a measured item. Cost for work herein specified, including the furnishing of all materials, equipment, tools, labor and incidentals necessary to complete the work, shall be included in the unit price bid for waterlines in the Proposal.

TABLE A

Loss in Gallons Per Hour Per Foot of Pipe

Length	4”	6”	8”	10”	12”	18”	20”	24”
50	.04	.06	.08	.10	.12	.18	.195	.235
100	.08	.12	.16	.195	.235	.355	.395	.475
200	.16	.235	.315	.395	.475	.71	.785	.945
300	.235	.355	.475	.59	.71	1.065	1.185	1.42
400	.315	.475	.63	.785	.945	1.42	1.58	1.89
500	.395	.59	.785	.985	1.185	1.775	1.975	2.365
600	.475	.71	.945	1.185	1.42	2.13	2.365	2.84
700	.555	.83	1.105	1.38	1.655	2.485	2.76	3.31
800	.63	.945	1.265	1.58	1.895	2.84	3.155	3.785
900	.71	1.065	1.42	1.775	2.13	3.195	3.55	4.26
1000	.79	1.185	1.58	1.975	2.365	3.55	3.945	4.735

Calculations Based on a Loss of 25 Gal./Diameter inch of Pipe/Mile of Pipe/Day

PART 2 – PRODUCTS

2.1 MATERIALS

A. EQUIPMENT PROVIDED BY CONTRACTOR

The contractor shall furnish pump, pipe connections and all necessary apparatus (including gauges and meters) to hydrostatically test the water lines according to this specification.

B. WATER FOR TESTING

Water for testing will be furnished by the City. All connections of new pipeline must be isolated from existing potable water lines until a negative coliform test report from the County Health Department or TCEQ approved lab has been received.

PART 3 – EXECUTION

3.1 GENERAL

A. All water mains including water services shall be hydrostatically tested and sterilized according to SECTION 33 13 00 - DISINFECTION OF WATERLINES, prior to acceptance by the City.

B. This section specifies hydrostatic testing of water distribution lines. The contractor shall test waterlines after backfilling, but before replacement of pavement (if applicable.)

C. Test waterlines in sections, by pressurizing the new system to 150 psi and holding that pressure for a total test time of 4 hours.

3.2 PRESSURIZATION

A. Each valved section of pipe shall be filled with water slowly. The test pressure, based on the elevation of the lowest point of the line or section under test and corrected to the elevation of the test gauge, shall be applied by means of a pump connected to the pipe in a manner satisfactory to the City Engineer.

3.3 AIR REMOVAL

A. Before applying the specified test pressure, air shall be expelled completely from the pipe, valves and hydrants. If permanent air vents are not located at all high points, the Contractor shall install corporation cocks at such points so that the air can be expelled as the line is filled with water. After all the air has been expelled, the corporation stops shall be closed and the test pressure applied twenty-four (24) hours after filling the line.

B. At the conclusion of the pressure test, the corporation stops shall be removed and plugged, or left in place at the discretion of the City Engineer. Any added corporation cocks must be shown on as-built plans if they are to remain in place.

3.4 EXAMINATION

A. All exposed pipe, fittings, valves, hydrants and joints shall be examined carefully during the test. Any damage or defective pipe, fittings, valves or hydrants that are discovered following the test shall be repaired or replaced with sound material and the test shall be repeated until it is satisfactory to the City Engineer.

1. Allowable Pressure Loss

   a.) For DIP and PVC

   No pipe installation will be accepted if the water loss is greater than that shown in Table A. No additional leakage will be included for fittings.

   b.) When hydrants are in the test section, the test shall be made against the closed hydrant and not the valve on the lead.

2. Acceptance of Installation

   a.) Acceptance shall be determined on the basis of allowable pressure loss**.** If any test of pipe discloses a pressure loss greater than that specified, the Contractor shall, at his own expense, locate and repair the defective material until the pressure loss is within the specified allowance.

   b.) All visible leaks are to be repaired, regardless of the amount of pressure loss.

END OF SECTION

SECTION 33 40 01

STORM DRAINAGE SYSTEM

(Sentences and/or paragraphs that are double underlined indicate revisions that were made from the 2009 specification.)

PART 1 - GENERAL

1.1 DESCRIPTION

A. This Specification includes the general description of the Storm Drainage System and the components included in that system.

B. This is a general specification which applies to the furnishing of all plant, labor, equipment, appliances and materials and in performing all operations in connection with the construction of storm drainage systems, together with the inlets, storm drain manholes, headwalls, safety end treatments, cleanout structures and other incidentals, in accordance with the plans and these specifications.

1.2 MEASUREMENT AND PAYMENT

Payment shall be made at the price bid per unit item for furnishing and installing pipe, which bid price will include all costs for the complete pipe installation, including trenching and backfill, embedment, compaction or tamping, testing, final cleanup, and all other work not otherwise provided for in the Proposal.

A. Pipe

Payments will be made at the price bid per foot for furnishing and installing pipe, which bid price will include all costs for the complete pipe installation, including line fittings, trenching, and backfill, embedment, compaction or tamping, and all other work not otherwise provided for in bid proposal. Pipe will be measured (by horizontal distance) from the inside face of the inlet or junction box or end of pipe without adjustment for the slope of the pipe. The length of the inlet or junction box shall not constitute a payable quantity.

B. Manholes/Junction Boxes

Payment will be made at the unit price bid per each for manhole. Manholes will be measured per each.

C. Inlets

Payment will be made at the unit price bid per each for inlet by length and type. Inlets will be measured per each.

D. Headwalls

Payment will be made at the unit price bid per each for headwall by type. Headwalls will be measured per each.

E. Rock Rubble Rip Rap

Rock Rubble Rip Rap shall be measured by area as provided for in the bid proposal form.

F. Channel Grading

Channel Grading shall be measured by area as provided for in the bid proposal form.

1.3 SUBMITTALS

All submittal requirements are listed with the material specifications

PART 2 – PRODUCTS

2.1 MATERIALS

See:
SECTION 31 78 00 - PIPE BORING, JACKING AND TUNNELING
SECTION 31 23 33 - EXCAVATING, TRENCHING, AND BACKFILLING
SECTION 03 30 00 - CONCRETE
SECTION 33 40 02 - REINFORCED CONCRETE PIPE
SECTION 33 40 03 - STANDARD STORM SEWER INLETS
SECTION 33 40 05 - REINFORCED CONCRETE HEADWALLS
SECTION 33 42 16 - PRECAST BOX CULVERTS
SECTION 33 40 04 - REINFORCED CONCRETE RIPRAP
HDPE Storm Drain Pipe (to be specified by design engineer)

2.2 TESTING REQUIREMENTS

T.V. Camera Inspection shall be performed on all installed underground storm drain conduits longer than 20 feet before acceptance. When the Contractor performs the inspection, the City Engineer or his representative shall be notified one working day prior so that he can view the procedure. The inspection shall be in digital video format, saved to a DVD or CD (enclosed within a protective case) and shall be given to the City Engineer or his representative for review and final records.

Conduit shall be cleaned prior to T.V. inspection. All dirt/debris in the line which could cover a defect shall be removed. Jetting of the lines in conjunction with the T.V. Inspection is prohibited. If the line to be televised is discovered to contain foreign material, which prohibits an acceptable T.V. inspection, the line shall be cleaned and televised again.

Select and use closed circuit television equipment that will produce a color digital video that clearly shows pipe and joints, and shall be a self propelled tractor-type system. Produce and use closed circuit television equipment using a panorama tilt, radial viewing, pipe inspection camera that pans plus and minus 75 degrees, rotates 360 degrees, and has optical zoom from 6 or less inches to infinity. The camera must have an accurate footage counter accurate to within 1 foot per 500 foot of pipe. Footage shall be continuously displayed on the video at all times. The camera operator shall stop at each junction box and complete a 360 degree view of the junction box slow enough to identify all defects. Glare shall be avoided and shall not interfere with viewing the pipe segment. Maximum rate of travel for the camera shall be 30 feet per minute. DVDs or CDs shall be continuous between manholes. Provide DVDs or CDs with labels indicating project number, segment number, date televised, date submitted, starting manhole number, ending manhole number, pipe diameter, pipe length and street name.

The T.V. inspection shall be used to identify defective construction such as sags, debris, separated joints, etc. The City Engineer shall make all final determinations if the severity of the defect constitutes failure and subsequent removal of the segment in question.

PART 3 – EXECUTION

3.1 GENERAL

Construction methods for each material are specified in the material specifications.

A. Minimum Cover

The minimum cover for class III storm drain pipe (12” through 60”) (See SECTION 33 40 02 – REINFORCED CONCRETE PIPE) shall be two feet (2’) in areas subject to vehicular loads and one foot in non-vehicular areas as measured from the outside top of pipe vertically to finished ground or pavement surface elevation.

END OF SECTION

SECTION 33 40 02

REINFORCED CONCRETE PIPE

(Sentences and/or paragraphs that are double underlined indicate revisions that were made from the 2009 specification.)

PART 1 - GENERAL

1.1 DESCRIPTION

A. This item includes the furnishing of labor, materials, equipment, and supervision in the operations required in the laying and jointing of reinforced concrete pipe.

1.2 MEASUREMENT AND PAYMENT

A. Measurement shall be made based upon the length of pipe as laid in the field. Length of inlets and junction boxes are not included in this measurement. Pipe shall be paid for at the unit price bid in the Proposal for each size and type of pipe, which price shall be full compensation for trenching and backfilling, furnishing and laying the pipe, and furnishing all equipment, labor, materials, tools and incidentals necessary to complete the work.

1.3 SUBMITTALS

A. Submit certification from independent testing laboratory at manufacturer expense that the pipe meets the requirements of ASTM C76/C76M and ASTM C497/C497M.

PART 2 – PRODUCTS

2.1 MATERIALS

The Publications listed below form a part of this Specification to the extent referenced. The publications are referred to in the text by basic designation only.

AMERICAN SOCIETY OF TESTING AND MATERIALS (ASTM)

ASTM C76	Standard Specification for Reinforced Concrete Culvert Storm Drain and Sewer Pipe (Latest Revision)
ASTM C443	Standard Specification for Joints for Circular Concrete Sewer and Culvert Pipe, Using Rubber Gaskets (Latest Revision)

A. Reinforced Concrete Pipe

1. Reinforced concrete pipe to meet the requirements of ASTM C76. The pipe shall be Class III unless otherwise shown on PLANS.
2. Joint reinforced for rubber gasket joints to meet the requirements of paragraph 8 of ASTM C76.
3. Joints shall be rubber gasket per ASTM C443 unless otherwise shown on PLANS. Lubricant materials for installation purposes to be per manufacturers recommendations. Mineral lubricants are not to be used.
4. Pipe coating requirements are shown on PLANS if required.

2.2 TESTING REQUIREMENTS

Testing methods for the reinforced concrete pipe shall conform to the latest revision of ASTM C497 (Standard Test Methods for Concrete Pipe, Manhole Sections, or Tile).
REJECTION: The pipe may be rejected for having defects or failure to meet requirements as follows:

A. Variations in any dimension exceeding the permissible variations prescribed.

B. A piece broken out of the bell or spigot end of such size that the water-tightness of the joint would be impaired.

C. Any shattering or flaking of concrete or other conditions indicating an improper concrete mix.

D. Lack of uniformity in placement of steel which might preclude all joints being typical of those tested.

E. Cracks sufficient to impair the strength, durability or serviceability of the pipe.

PART 3 – EXECUTION

3.1 DELIVERY, STORAGE, AND HANDLING

Shipment of pipe to be in accordance with the manufacturer's recommendations. Pipe to be unloaded and stored in a location where pipe will be protected from damage.

3.2 TRENCH/BACKFILL

Pipe trench excavation and backfill to be in accordance with SECTION 31 23 33 – EXCAVATING, TRENCHING, AND BACKFILLING and/or as shown on Plans or as directed by the City Engineer.

3.3 JOINTING OF PIPE

A. Lay pipe sections in trench to true alignment and grade. Take exceptional care in placing pipe and making field joints. Avoid bumping of pipe in trench.

B. Properly lubricate groove end of pipe and rubber gasket with lubricant. Stretch gasket over the spigot end of the pipe. Gasket shall be "equalized" by placing a screwdriver between the gasket and spigot and run around the full joint circumference. Do not twist, roll, cut, crimp, or otherwise injure gaskets or force out of position during closure of joints.

C. Pull or push "home" pipe for closure of the joint. Correct joint rebound before backfilling of pipe.

D. Remove foreign matter or dirt from pipe, and keep clean during and after laying.

E. Any damages in pipe installation or prior to final acceptance is to be repaired or replaced in accordance with ASTM C76 at no additional cost to the City.

F. Failure to conform with any of the specifications herein set forth or referenced.

G. Failure of pipe to go completely "home" due to binding of spigot against bell.

END OF SECTION

SECTION 33 40 03

STANDARD STORM SEWER INLETS

(Sentences and/or paragraphs that are double underlined indicate revisions that were made from the 2009 specification.)

PART 1 - GENERAL

1.1 DESCRIPTION

A. This item shall include Reinforced Concrete Standard Storm Sewer Inlets, which shall be constructed in true conformity with lines, grades, dimensions and designs as shown on the Plans and Standard Detail Sheet and in accordance with this Specification.

1.2 MEASUREMENT AND PAYMENT

A. This item shall be measured and payment will be made at the unit price bid for each in the Proposal for each Standard Storm Sewer Inlet based upon length of opening. Such payment shall constitute full compensation for furnishing all labor, materials, equipment and incidentals necessary to complete the work, including excavation, forming, reinforcing steel, furnishing and placing concrete, covers, appurtenances, etc. Payment shall not be made for unauthorized work.

1.3 SUBMITTALS

A. Manufacturers cut sheet for inlet and covers.

PART 2 – PRODUCTS

2.1 MATERIALS

A. Concrete shall be 3000 psi reinforced concrete.

B. Manhole Rings and Covers

The standard rings and covers (V-1342A) and storm plate (V-7001PL2) shall be manufactured by East Jordan Iron Works (or approved equal with approval of City Engineer.)

2.2 TESTING REQUIREMENTS

Concrete test results shall be furnished in accordance with SECTION 03 30 00 – CONCRETE.

PART 3 – EXECUTION

3.1 GENERAL

A. This construction of reinforced concrete inlets shall be in accordance with standard procedure and shall conform to the location, line, grade, dimension and detail as shown on the Plans and/or directed by the Engineer. All inlets shall be cast in place unless approved by the City Engineer in writing. All excavation, forming and placing of reinforcing steel shall be approved by the Engineer before any concrete is placed. All backfill for inlets shall be in accordance with the Plans.

END OF SECTION

SECTION 33 40 04

REINFORCED CONCRETE RIPRAP

PART 1 - GENERAL

1.1 DESCRIPTION

A. This item shall govern the furnishing and placing of riprap of concrete of the type indicated on the plans or specified by the Engineer.

1.2 MEASUREMENT AND PAYMENT

A. Measurement of acceptable riprap complete in place will be made on the basis of the area actually covered.

B. Concrete in toe walls will be measured as riprap of the type with which it is placed.

C. The riprap quantities, measured as provided above, will be paid for at the unit prices bid in the Proposal for Reinforced Concrete Riprap, which price will be full compensation for furnishing, hauling, and placing all materials including reinforcement and for all labor, tools, equipment and incidentals necessary to complete the work.

D. Payment for excavation of toe wall trenches, all necessary excavation below natural ground or bottom of excavated channel, shaping of slopes, will be included in the unit price bid for riprap.

E. Payment will not be made for unauthorized work.

1.3 SUBMITTALS

A. Concrete Mix Designs

B. Certification for cement conformance to specification

C. Test reports for all required concrete tests

PART 2 – PRODUCTS

2.1 MATERIALS

A. Materials for concrete shall conform to the requirements of SECTION 03 30 00 - CONCRETE. Concrete shall be of the class shown on the plans unless otherwise specified by the Engineer.

2.2 TESTING REQUIREMENTS

As specified in SECTION 03 30 00 - CONCRETE.

PART 3 – EXECUTION

3.1 GENERAL

A. The slopes and other areas to be protected shall be dressed to the line and grade shown on the plans prior to the placing of riprap. Riprap shall not be placed on embankment slopes

until the embankment has been compacted to ninety-eight (98%) percent of Standard Density as specified in A.S.T.M. Designation D-698 or as shown on the plans.

B. Concrete for riprap shall be placed in accordance with the details and to the dimensions shown on the plans or as established by the Engineer. Concrete riprap shall be reinforced using #4 steel bars spaced at 12 inches on center. Wire reinforcement will not be allowed.

C. Reinforcement shall be supported properly throughout the placement to maintain its position equidistant from the top and bottom surface of the slab.

D. If the slopes and bottom of the trench for toe walls are dry and not consolidated properly, the Engineer may require the entire area to be sprinkled, or sprinkled and consolidated before the concrete is placed. All surfaces shall be moist when concrete is placed.

E. After the concrete has been placed, compacted and shaped to conform to the dimensions shown on the plans, and after it has set sufficiently to avoid slumping, the surface shall be finished with a wooden float to secure a reasonably smooth surface.

F. Immediately following the finishing operation the riprap shall be cured in accordance with SECTION 03 30 00 - CONCRETE.

END OF SECTION

SECTION 33 40 05

REINFORCED CONCRETE HEADWALLS AND ENDWALLS

PART 1 - GENERAL

1.1 DESCRIPTION

A. This item shall include reinforced concrete headwalls and endwalls which shall be constructed as indicated on the Plans in true conformity with the lines, grades, dimensions and designs as shown on the Plans and in accordance with this Specification.

1.2 MEASUREMENT AND PAYMENT

A. Payment for reinforced concrete headwalls or sloped end treatments will not be considered a separate pay item but shall be considered subsidiary to the price of the drainage pipe.

1.3 SUBMITTALS

A. Concrete Mix Designs

B. Certification for cement conformance to specification

C. Test reports for all required concrete tests

PART 2 – PRODUCTS

2.1 MATERIALS

Concrete shall be reinforced concrete as specified in SECTION 33 40 05 – REINFORCED CONCRETE HEADWALLS.

2.2 TESTING REQUIREMENTS

As specified in SECTION 31 23 33 – EXCAVATING, TRENCHING, AND BACKFILLING and SECTION 03 30 00 - CONCRETE.

PART 3 – EXECUTION

3.1 GENERAL

A. The surface of the ground on which the headwalls are to be constructed shall be tamped and compacted to ninety-eight percent (98%) standard proctor density (ASTM D 698) to form the bottom of the headwalls and endwalls. The construction of reinforced concrete headwalls and endwalls shall be in accordance with standard procedure and shall conform to the location, line, grade and dimensions as shown on the Drawings and/or as directed by the Engineer. All excavation, forming and placing of reinforcing steel shall be approved by the Engineer before any concrete is placed.

END OF SECTION

SECTION 33 41 16

DRAINAGE CHANNEL EXCAVATION

PART 1 - GENERAL

1.1 DESCRIPTION

A. Channel Excavation shall consist of required excavation as shown on the Plans; the removal and proper disposal of all excavated materials; and constructing, shaping, and finishing of all earthwork involved in conformity with the required lines, grades and typical cross sections in accordance with Specification requirements herein outlined.

B. If no classification is indicated on the Plans, "Unclassified Channel Excavation" shall include all materials encountered regardless of their nature or the manner in which they are removed.

1.2 MEASUREMENT AND PAYMENT

A. All channel excavation shall be measured in its original position and the volume computed in cubic yards by the method of average end areas.

B. All work performed as required herein and measured as provided in the bid proposal will be paid for at the unit price bid per cubic yard. The price bid shall be full compensation for furnishing all labor, material, tools, equipment, and incidentals to complete the work. This payment is to include any and all clearing, grubbing, removal of trees, stumps, trash and debris necessary to perform the work under "Drainage Channel Excavation". This payment shall also be full compensation for shaping and disposal of all material removed and/or excavated.

PART 2 – PRODUCTS

N/A

PART 3 – EXECUTION

3.1 GENERAL

A. All materials removed from the excavation shall be satisfactorily disposed of as indicated on Plans, or as directed by the Engineer. Completed work shall conform to the established alignment, grades and cross sections. During construction, the channel shall be kept drained and the work shall be prosecuted so that the flow into and through the channel is not impeded. Care shall be taken such that spoils left near the channel are not washed into the channel during rainfall events. The placement of erosion control devices may be necessary to prevent the deposition of the silt into the channel.

END OF SECTION

SECTION 33 42 16.13

PRECAST REINFORCED CONCRETE BOX CULVERTS

(Sentences and/or paragraphs that are double underlined indicate revisions that were made from the 2009 specification.)

PART 1 - GENERAL

1.1 DESCRIPTION

A. This specification shall govern for the furnishing and placing of precast reinforced concrete box culverts of the size, type and configuration installed to the lines and grades established by the plans.

1.2 MEASUREMENT AND PAYMENT

A. All box culverts installed in accordance with the above specifications and accepted by the Engineer shall be considered as a complete installation, in place and paid for by the linear foot as noted in the Bid Proposal complete in place, of the type, size and depth constructed. The unit price bid shall be full compensation for furnishing all material, equipment and labor for all excavation, shaping of trench bottom, jointing, laying, dewatering, sheeting, bracing, bedding, backfilling, and specials necessary to install the box sewers in accordance with this specification and of the size, type and depth as shown on the plans.

1.3 SUBMITTALS

A. Manufacturer's certification that the Precast Reinforced Concrete Box Sections meets the required ASTM Standards.

PART 2 – PRODUCTS

2.1 MATERIAL

Precast reinforced concrete box culverts shall be manufactured in accordance with the latest revisions published by the American Society for Testing Materials of the following specifications:

A. ASTM C1577 – Precast Reinforced Concrete Monolithic Box Sections for Culverts, Storm Drains and Sewers, Designed According to AASHTO LRFD.

B. ASTM C1677 – Joints for Concrete Box Using Rubber Gaskets

Unless otherwise specified, all boxes furnished under this specification shall be fabricated with rubber gasket joints.

PART 3 – EXECUTION

3.1 GENERAL

A. Joints in concrete boxes shall be made watertight by the use of rubber gaskets.

3.2 INSTALLATION

A. Trenches shall be excavated with suitable type equipment such as ladder type trenching machines or trench hoes or other equipment that may be approved by the Engineer. Trenches for precast box sewers shall have a width below the top of the box of not less than the outside width of the box plus 16 inches and shall be wide enough to permit making up the joints.

B. After the trench has been excavated to the bottom, the trench shall be fine graded to the established sub-grade and re-compacted to a density of at least 90% of maximum as determined using ASTM D 698. Any over excavation of the subgrade shall be filled with 3 sack per cubic yard of cement stabilized sand. Cement stabilized sand shall be in accordance with SECTION 31 23 23.53 – CEMENT STABILIZED SAND BACKFILL. The Contractor shall establish the grade line in the trench from grade stakes. The Contractor shall maintain this grade control a minimum of 100 feet behind and ahead of the box laying operation. The Contractor shall, at his expense, furnish and place in position all necessary stakes, grade and batter boards for locating the work.

C. The precast box sections shall be so laid in the trench that after the sewer is completely installed, the interior surface shall conform accurately to the grade and alignment as shown on the plans or as established and given by the Engineer. All box sections must be laid in a straight line with the tongue end of the box section pointed downstream entering the grooved end of the previously laid box section, to full depth. Caution shall be taken to not drag cement stabilized sand or earth into the annular space. Box sections shall be fitted together and matched to achieve a finished storm sewer with a smooth and uniform invert.

D. When the tongue is correctly aligned with the flare of the groove the box section shall be pulled or pushed home with sufficient force and power (backhoe, shovel, chain hoist, ratchet hoist or winch) to fully home the spigot into the bell. Each box section shall be pulled home in a straight line with all parts of the box section on line and grade at all times.

E. No box sewer shall be laid in a trench in the presence of water. All water shall be removed from the trench sufficiently ahead of the sewer placing operation to insure a dry, firm bed on which to place the sewer, and if necessary, the trench will continue to be dewatered until after the sewer is bedded and backfilled as directed by the Engineer. Removal of water may be accomplished by pumping, or pumping in connection with the well point installation as the particular situation may warrant. The Contractor shall satisfy himself as to the soil conditions to be encountered.

F. Where necessary, to comply with OSHA Regulation 1926.650, the side of the trench or other excavation shall be braced and rendered secure to the satisfaction of the Engineer. Board sheeting and/or steel sheeting may be utilized as directed by the Engineer. The bracing shall be in accordance with OSHA requirements.

G. Following compaction of the trench bottom at the established grade, the Contractor shall place a minimum of a 6 inch thickness cement stabilized sand bedding in such a manner that once the box sections are laid, the invert elevation in the box section shall conform to the plan elevations. No voids in the bedding material shall be permitted. Cement stabilized sand shall be composed of a minimum of 3 sacks of cement per cubic yard of sand.

H. When installing concrete box culverts in an existing channel, ditch or gully, cement stabilized sand shall be placed up to the spring line of the box culvert.

I. When installing concrete boxes in a trench condition, backfill shall consist of material excavated on the site, and deemed adequate by the Engineer, or materials obtained from a suitable borrow site. Suitable materials shall be CL/CH materials as determined by the Uniform Soil Classification System that are cohesive in nature, free of debris and organic materials and acceptable to the Engineer. Backfill shall be placed in maximum eight (8) inch lifts, sprinkled as required and compacted to a density of 90% standard proctor density (ASTM D 698). Moisture content shall be controlled so that the required density is achieved at a moisture content ranging from optimum moisture to 3 percent above optimum density.

J. Backfill over box sections will be permitted as installation proceeds. Prior to backfilling, the Contractor shall remove all steel sheeting and/or cut off all timber sheeting a minimum of three (3) feet below finished grade as shown by the plans. Backfill shall consist of material excavated on the site and deemed adequate by the Engineer or materials obtained from a suitable borrow site. Suitable materials shall be CL/CH materials as determined by the Uniform Soil Classification System (ASTM D 2487) and are cohesive in nature, free of debris and organic materials and acceptable to the Engineer. Backfill shall be placed in maximum eight (8) inch lifts, sprinkled as required and compacted to a density of 90% standard proctor density (ASTM D 698). Moisture content shall be controlled so that the required density is achieved at a moisture content ranging from optimum moisture to 3 percent above optimum density.

K. Where backfill occurs beneath a road surface the material from two (2) feet below subgrade to the established base material shall be compacted to a density of 98% standard proctor density (ASTM D 698).

L. A seal slab shall be installed, when shown by the drawings. If precast seal slabs are used, the joint of the seal slab shall not coincide with the joint of the box.

M. Laboratory tests will be performed as the backfill proceeds. All backfill not meeting this specification shall be removed and re-compacted to the satisfaction of the Engineer at no cost to the Owner.

N. All surplus excavated material shall become the property of the Contractor and shall be disposed of by the Contractor.

O. The angles in box type sewers shall be built in accordance with the plans and specifications. The cost of making these angles and all cost incidental to them shall be included in the unit price bid for box sewer.

P. Where junction with other storm sewers are to be made, openings may be left in the walls the size of which shall be the outside dimensions of the connecting sewer. A bond length of each reinforcing bar shall be left in the opening for connecting with the concrete collar or future sewer. Where a stub sewer is to be built, the end of the concrete of the stub sewer at the box sewer shall be at the inside face of the sewer box wall. All openings shall be closed with a 12-inch thick brick bulkhead. The cost of providing bulkheads shall be included in the unit price for the box sewer.

END OF SECTION

City of Bryan

Record of Excavation

Instructions: This record must be prepared for each excavation in a readable, descriptive, and accurate manner. All necessary signatures must be present and approved prior to commencement of work. This record must be retained for (3) years.

Division: _____ Date of Excavation: _____

Period that the Excavation is open: (dates) _____

Specific Location: _____

Purpose: _____

Class of soil determined to be: (check one) ☐ A ☐ B ☐ C
(See Appendix A to Subpart P)

Soil test used: _____

Visual: ☐Layered ☐Cohesive ☐Granular ☐Gravel ☐Utilities
☐Water drains from sides or bottom

Manual: ☐Plasicity ☐Dry Strength ☐Thumb Penetration

1. All public utility systems notified? ☐Yes ☐No
2. Received permit to dig before digging? ☐Yes ☐No
   Time: _____ Date: _____
   Person: _____
3. Hazardous atmosphere tested? ☐Yes ☐No
4. Constructed means of egress from excavation? ☐Yes ☐No
5. Controlled exposure to vehicle traffic? ☐Yes ☐No
6. Controlled exposure to falling loads? ☐Yes ☐No
7. Warning system for mobile equipment? ☐Yes ☐No
8. Determined emergency rescue equipment needed and available? ☐Yes ☐No
9. Prepared for hazards of water accumulation? ☐Yes ☐No
10. Verified stability of adjacent structure? ☐Yes ☐No
11. Constructed protection from loose rock and soil daily ☐Yes ☐No
12. Scheduled a worksite inspection plan? ☐Yes ☐No
13. Prepared for fall protection? ☐Yes ☐No

Excavation Diagram: (Include length, width, depth)

<u>Diagram / Explain type of excavation protection</u>: (Be specific and note distances)

Competent Person in Charge of Excavation:

_____ _____

Signature Date

POLICY
UTILITY INSTALLATION NOTIFICATION

It is the policy of the City of Bryan Public Works Services Department and it's Divisions that all city work forces and/or city contractors performing work involving the installation of underground utilities provide adequate notification to utility companies prior to the commencement of any excavation activity.

Notification of all utility companies shall occur at least 2 Working Days in advance of the planned excavation activity in accordance with Chapter 251 of the State of Texas Utilities Code, Title 5. A record of the notification time, date, and person contacted shall be made and retained for the City of Bryan's records. City work forces under the direction of the Director of Public Works, shall forward a copy of this notification record to the Public Works Services Department's office. Contractors performing work under the direction of the Engineering Division shall forward a copy of the notification record to the City Engineer's office so that it may be filed in the Engineering Division's files. A form entitled "Utility Installation Notification Check-Off List" shall be used to maintain a record of notification activities.

If a utility company that has been duly notified fails to respond to a request for locating their underground facilities within the prescribed period, City of Bryan work forces and/or contractors are advised that they must notify the utility company and/or companies that work will commence on the planned underground excavation within 1 Working Day. It is the responsibility of the various utilities to respond to a request that its lines be located.

In no event should a city work force and/or contractor delay its work activities for a period exceeding 3 Working Days. If an underground utility company has not responded within the prescribed 3 Working Days, city work forces and/or its contractors are advised to commence the underground excavation activity. After the above described notification period has expired, all responsibility for underground utility breaks and/or ruptures become the responsibility of the owning utility company.

The following procedure will be followed when an emergency excavation of underground facilities is required. If the emergency condition will permit notification time, city work forces and/or contractors shall notify all utility companies that an emergency condition exists that may involve underground facilities owned by the utility company. The nature, location and commencement time of the planned excavation work necessary to resolve the emergency condition will be communicated to the utility companies. The utility company or companies shall advise the agency conducting the emergency excavation of the time necessary for them to respond to a location request. City work forces and/or contractors (agencies making emergency excavation) shall not be required to delay emergency repairs for a period exceeding the time to respond indicated by the utility company or companies. In the event that the emergency condition does not provide city work forces and/or contractors time for notification, emergency work will be completed and any damage to underground facilities will be reported to the owning utility company immediately following completion of the emergency work activity. Damage information reported to the utility company involved shall include the type of damage, location, time that the damage occurred, name of city department and/or contractor along with address and telephone number. All damage to facilities resulting from an emergency condition that did not allow notification time for underground locations will be considered the responsibility of the owning utility company.

UTILITY INSTALLATION NOTIFICATION
CHECK-OFF LIST

CONTRACTOR _____

PROJECT NO./SUBDIVISION _____

UTILITY	DATE/TIME UTILITY CALLED	DATE/TIME UTILITY RESPONDED	NAME OF UTILITY CONTACT
Texas One Call			
Verizon			
C.O.B. Engineering Dept.			
C.O.B. Water Services			
BTU			
SuddenLink Cablevision			
Atmos Gas			

Miscellaneous: _____

_____

_____

TELEPHONE NUMBERS FOR LOCATION OF CABLES & LINES

Texas One Call	1-800-245-4545
AT&T	1-800-252-1133
Sprint	1-800-443-1876
Southwestern Bell	1-800-669-8344
Verizon	1-800-344-8377
Southwestern Gas Pipeline	936-878-2482
Bryan Woodbine Gathering	979-778-8046 or 979-776-0285
BWOC	979-778-0069 or 979-776-0121
Exxon Pipeline Company	713-656-3315 or 979-272-8171
Energy Transfer	1-800-375-5702 or 210-403-7300
Atmos Gas	1-800-460-3030
SuddenLink Cablevision	979-846-2229
Wickson Crk. Spec. Utility District	979-589-3030

TX130016

(1/3/2014)

WAGE SCALE

As required by the Department of Labor in Washington, D.C., investigations have been made to determine the prevailing wage rates for the classes of labor expected to be involved in the various classes of labor on this project.

PREVAILING WAGE RATES IN THE LOCALITY OF THIS PROJECT FOR LABORERS, WORKMEN AND MECHANICS

CRAFT	BASIC HOURLY RATES
Agricultural Tractor	$12.69
Asphalt Distributor Operator	15.55
Asphalt Paving Machine Operator	14.36
Asphalt Raker	12.12
Boom Truck	18.36
Broom or Sweeper Operator	11.04
Concrete Finisher (Paving)	12.56
Concrete Finisher (Structures)	12.56
Concrete Paving Finishing Machine Operator	15.48
Crane Operator (Hydraulic 80 Tons or Less)	18.36
Crane Operator (Lattice Boom 80 Tons or Less)	15.87
Crane Operator (Lattice Boom over 80 Tons)	19.38
Crawler Tractor	15.67
Directional Drilling Locator	11.67
Directional Drilling Operator	17.24
Electrician	26.35
Excavator (50,000 lbs or Less)	12.88
Excavator (over 50,000 lbs)	17.71
Flagger	9.45
Form Builder/Setter (Structures)	12.87
Form Builder/Setter (Paving and Curb)	12.94
Foundation Drill Operator (Truck Mounted)	16.93
Front End Loader Operator (3cy or Less)	13.04
Front End Loader Operator (Over 3 cy)	13.21
Laborer - Common	10.50
Laborer - Utility	12.27
Loader/Backhoe	14.12
Mechanic	17.10
Milling Machine	14.18
Motor Grader Operator (Fine Grade)	18.51
Motor Grader Operator (Rough Grade)	14.63
Painter - Structures	18.34
Pavement Marking Machine Operator	19.17
Pipe Layer	12.79
Reclaimer/Pulverizer	12.88
Reinforcing Steel Worker	14.00

CRAFT	BASIC HOURLY RATES
Roller Operator, Asphalt	12.78
Roller Operator, Other	10.50
Scraper Operator	12.27
Servicer	14.51
Spreader Box Operator	14.04
Structural Steel Worker	19.29
Traffic Signal/Light Pole Worker	16.00
Trenching Machine Operator, Heavy	18.48
Truck Driver - Tandem Axle Tractor w/ Semi-Trailer	12.81
Truck Driver - Lowboy/Float	15.66
Truck Driver - Single Axle	11.79
Truck Driver – Single or Tandem Axle Dump Truck	11.68
Truck Driver – Off Road Hauler	11.88
Welder	15.97
Work Zone Barricade Servicer	11.85

SALES TAX EXEMPTION CERTIFICATE

01-339 (Back)
(7/01/09)

TEXAS SALES AND USE TAX EXEMPTION CERTIFICATION

Name of purchaser, firm or agency City of Bryan, Engineering Division	
Address (street & number, P.O. Box or Route number P. O. BOX 1000	Phone (Area code and number) (979) 209-5030
City, State, ZIP code BRYAN, TEXAS 77805	

I, the purchaser named above, claim an exemption from payment of sales and use taxes for the purchase of taxable items described below or on the attached order or invoice form:

CONTRACTOR:

_____

Street Address: _____City, State, ZIP Code: _____

Description of items to be purchased or on the attached order or invoice:

All labor, materials, supplies and equipment purchased for and consumed or corporated in the City of Bryan Construction.

Project: _____

Project Manager: _____

CIP No.: _____

Purchaser claims this exemption for the following reason:

This contract is to be performed for an exempt organization as defined by sections 11. 11, 151.309, or 151.310 of the Tax Code of Texas. (Tax I.D. #1-74-6000441)

I understand that I will be liable for payment of sales and use taxes which may become due for failure to comply with the provisions of the Tax Code: Limited Sales, Excise, and Use Tax Act; Municipal Sales and Use Tax Act; Sales and Use Taxes for Special Purpose Taxing Authorities; County Sales and Use Tax Act; County Health Services Sales and Use Tax; The Texas Health and Safety Code; Special Provisions Relating to Hospital Districts, Emergency Services Districts, and Emergency Services Districts in counties with a population of 125,000 or less.

I understand that it is a criminal offense to give an exemption certificate to the contractor for taxable items that I know, at the time of purchase, will be used in a manner other than that expressed in this certificate and depending on the amount of tax evaded, the offense may range from a Class B misdemeanor to a felony of the second degree.

Purchaser's Signature	Title	Date
JOE B. HEGWOOD	CHIEF FINANCIAL OFFICER	January, 2012

NOTE: This certificate cannot be issued for the purchase, lease, or rental of a motor vehicle.
THIS CERTIFICATE DOES NOT REQUIRE A NUMBER TO BE VALID.
Sales and Use Tax "Exemption Numbers" or "Tax Exempt" Numbers do not exist.

This certificate should be furnished to the supplier. Do not send the completed certificate to the Comptroller of Public Accounts.

CITY OF BRYAN
GENERAL PROVISIONS AND REQUIREMENTS

I N D E X

GENERAL PROVISIONS AND REQUIREMENTS

ITEM 1 - DEFINITION OF TERMS

1.1 Definition of Terms
1.2 Abbreviations
1.3 Advertisement
1.4 Bidder
1.5 City
1.6 City Attorney
1.7 City Council
1.8 City Engineer
1.9 City Manager
1.10 City Secretary
1.11 Contract
1.12 Contractor
1.13 Contract Bond
1.14 Final Completion
1.15 Inspector
1.16 Mayor
1.17 Plans
1.18 Proposal
1.19 Proposal Guarantee
1.20 Right-of-way
1.21 Special Provisions
1.22 Specifications
1.23 Superintendent
1.24 Substantially Completed
1.25 Surety
1.26 The Work
1.27 Working Day
1.28 Calendar Day
1.29 Business Day

ITEM 2 - INSTRUCTIONS TO BIDDERS

2.1 Proposal Form
2.2 Quantities in Proposal Form
2.3 Examination of Plans, Specifications & Site of the Work
2.4 Bidder Qualifications
2.5 Preparation of Proposal
2.6 Irregular Proposals
2.7 Proposal Guaranty
2.8 Filing of Proposal
2.9 Withdrawing Proposals
2.10 Opening Proposals
2.11 Disqualification of Bidders

ITEM 3 - AWARD AND EXECUTION OF CONTRACT

3.1 Consideration of Bids
3.2 Award of Contract
3.3 Return of Proposal Guaranty
3.4 Performance and Payment Bond
3.5 Execution of Contract
3.6 Failure to Execute Contract
3.7 Beginning of Work

ITEM 4 - SCOPE OF WORK

4.1 Intent of Plans and Specifications
4.2 Special Provisions
4.3 Increased or Decreased Quantities of Work
4.4 Alteration of Plans and Specifications
4.5 Extra Work
4.6 Stormwater Pollution Prevention
4.7 Final Cleanup

ITEM 5 - CONTROL OF THE WORK

5.1 Authority of the City Engineer
5.2 Conformity with Plans
5.3 Existing Structures
5.4 Coordination of Plans, Specifications, Proposal and Special Provisions
5.5 Cooperation of Contractor
5.6 Construction Stakes
5.7 Authority and Duties of Inspectors
5.8 Project Safety
5.9 Inspection
5.10 Removal of Defective and Unauthorized Work
5.11 Final Inspection
5.12 Punch List Inspection
5.13 Record Drawings

ITEM 6 - CONTROL OF MATERIALS

6.1 Source of Supply of Materials
6.2 Samples and Tests of Materials
6.3 Storage of Materials
6.4 Defective Materials
6.5 Arrangement and Charge for Water Furnished by the City
6.6 Product Submittals

ITEM 7 - LEGAL RELATION AND PUBLIC RESPONSIBILITY

7.1 Laws to be Observed
7.2 Permits and Licenses
7.3 State and City Sales Taxes
7.4 Patented Devices, Materials and Processes
7.5 Sanitary Provisions
7.6 Public Convenience and Safety
7.7 Privileges of Contractor in Streets, Alleys, and Rights-Of-Way
7.8 Railway Crossings
7.9 Barricades, Lights and Watchmen
7.10 Confined Space Entry
7.11 Use of Explosives
7.12 Protection and Restoration of Property
7.13 Responsibility for Damage Claims
7.14 Public Utilities and Other Property to be Changed
7.15 Use of a Section or Portion of the Work
7.16 Contractor's Responsibility for the Work
7.17 No Waiver of Legal Rights
7.18 Contractor's Insurance
7.19 Antitrust

ITEM 8 - PROSECUTION AND PROGRESS

8.1 Sub-letting the Work
8.2 Assignment of Contract
8.3 Prosecution of the Work
8.4 Limitation of Operations
8.5 Character of Workmen and Equipment
8.6 Computation of Contract Time for Completion
8.7 Substantial Completion
8.8 Final Completion
8.9 Failure to Complete on Time
8.10 Suspension by Court Order
8.11 Temporary Suspension
8.12 Suspension of Work and Annulment of Contract
8.13 Termination of Contract

ITEM 9 - MEASUREMENT AND PAYMENT

9.1 Measurement of Quantities
9.2 Scope of Payment
9.3 Payment for Extra Work
9.4 Partial Estimates
9.5 Final Acceptance
9.6 Final Payment
9.7 Guarantee of Work

ITEM 1 - DEFINITION OF TERMS

1.1 **DEFINITION OF TERMS**: Wherever the words, forms or phrases defined herein or pronouns used in their place occur in these specifications, in the contract, in the bonds, in the advertisements, or any other document or instrument herein contemplated, or to which these specifications apply or may apply, the intent and meaning shall be interpreted as follows:

1.2 **ABBREVIATIONS**: Whenever the abbreviations defined herein occur on the Plans, in the specifications, contract, bonds, advertisement, proposal, or in any other document or instrument herein contemplated or to which the specifications apply or may apply, the intent and meaning shall be as follows:

1.3 **ADVERTISEMENT**: All of the legal publications pertaining to the work contemplated or under contract.

1.4 **BIDDER**: Any person, persons, partnership, company, firm, association or corporation acting directly or through a duly authorized representative submitting a proposal for the work contemplated.

1.5 **CITY**: The City of Bryan, Texas, a Municipal Corporation, acting by and through (a) its governing body, or (b) its City Manager, each of whom is required by Charter to perform specific duties. Responsibility for final enforcement of contracts involving the City of Bryan is by Charter vested in the City Manager.

1.6 **CITY ATTORNEY**: The City Attorney of the City of Bryan, Texas or his duly authorized assistants or agents.

1.7 **CITY COUNCIL**: The Council of the City of Bryan, Texas.

1.8 **CITY ENGINEER**: The City Engineer of the City of Bryan, Texas or duly authorized assistants, employees, or agents, including any inspectors, project managers, or others designated by the City Engineer to assist on the Project.

1.9 **CITY MANAGER**: The Manager of the City of Bryan, Texas.

1.10 **CITY SECRETARY**: The City Secretary of the City of Bryan, Texas or his duly authorized assistants or agents.

1.11 **CONTRACT**: The written agreement covering the performance of the work. The contract includes the advertisement, proposal, specifications, including special provisions, Plans or working drawings and any supplemental changes or agreements pertaining to the work materials thereof, and bonds.

1.12 **CONTRACTOR**: The person, persons, partnership, company, firm, association or corporation entering into contract for the execution of the work, acting directly or through a duly authorized representative.

1.13 **CONTRACT BOND**: The security furnished by the Contractor and Surety as a guarantee on the part of the Contractor to execute the work in accordance with the terms of the contract.

1.14 **FINAL COMPLETION**: The term "Final Completion" shall mean that all the work has been completed, all final punch list items have been inspected and satisfactorily completed, all payments to materialmen and subcontractors have been made, all documentation and warranties have been submitted, and all closeout documents have been executed and approved by the City.

1.15 **INSPECTOR**: The authorized representative of the City Engineer assigned to supervise or inspect any or all parts of the work and the materials to be used therein.

1.16 **MAYOR**: The Mayor of the City of Bryan, Texas.

1.17 **PLANS**: All drawings pertaining to the contract and made a part thereof, including such supplementary drawings or addenda as the City Engineer may issue in order to clarify other drawings, or for the purpose of showing changes in the work hereinafter authorized, or for showing details not shown thereon.

1.18 **PROPOSAL**: The written statement duly filed with the Purchasing Manager by the person, persons, partnership, company, firm, association, or corporation proposing to do the work contemplated, including the approved form on which the formal bids for the work are to be prepared.

1.19 **PROPOSAL GUARANTEE**: The security designated in the advertisement and proposal, to be furnished by each bidder as a guarantee of good faith to enter into a contract with the City and execute the required bonds for the work contemplated after the work is awarded him.

1.20 **RIGHT-OF-WAY**: The land provided by the City upon which to construct the proposed work.

1.21 **SPECIAL PROVISIONS**: The special clauses setting forth the conditions or requirements peculiar to the specific project involved, supplementing the standard specifications, and taking precedence over any conditions or requirements of the standard specifications with which they are in conflict.

1.22 **SPECIFICATIONS**: The directions, provisions, and requirements contained herein or in a special specification, supplemented by such "Special Provisions" and "Supplemental Agreements" as may be issued or made pertaining to the method and manner of performing the work or to quantities and qualities of materials to be furnished under the contract. Where the phrases "Or directed by the City Engineer", “Ordered by the City Engineer”, or “To the satisfaction of the City Engineer” occur, it is to be understood that the directions, orders, or instructions to which they relate are within the limitations of the proposal and specifications. "Special Provisions" will cover work appertaining to a particular project and included in the proposal but not covered by the specifications and will govern and take precedence over specifications wherever in conflict therewith. "Supplemental Agreements" are written agreements entered into between the Contractor and the City are approved by the Surety, covering alterations and changes in Plans which are necessary to the proper completion of the work. Reference to standard specifications of Texas Department of Transportation (TxDOT), American Standard of Testing Materials (ASTM) and other organizations shall be interpreted to mean the latest published edition as of the date proposals are opened for this project.

1.23 **SUBSTANTIALLY COMPLETED**: The term "Substantially Completed" means that in the opinion of the City Engineer the Project, including all systems and improvements, is in a condition to serve its intended purpose but still may require minor miscellaneous work and adjustment. Final payment of the Agreement Price, including retainage, however, shall be withheld until Final Completion and acceptance of the work by the City. Acceptance by the City shall not impair or waive any warranty obligation of Contractor.

1.24 **SUPERINTENDENT**: The authorized representative of the Contractor.

1.25 **SURETY**: The corporate body which is bound with the Contractor as a guarantee of good faith on the part of the Contractor to execute the work in strict accordance with the Plans, specifications and terms of the contract.

1.26 **THE WORK**: All work, including the furnishing of labor, materials, tools, equipment, and incidentals, to be performed by the Contractor under the terms of the contract.

1.27 **WORKING DAY**: A working day is defined as a calendar day, not including Saturdays, Sundays or legal holidays in which weather or other conditions not under the control of the Contractor will permit the performance of the principal unit of work underway for a continuous period of not less than seven (7) hours between 7 a.m. and 6 p.m. Work on days other than a “working day” may be requested up to 48 hours in advance and requires approval by the City Engineer. If allowed, a working day will be charged and the Contractor shall pay the City for the cost of inspections services equal to $75.00 per hour for a minimum of 4 hours.

1.28 **CALENDAR DAY**: A calendar day includes all 7 days of the week, excluding legal holidays, under which the performance of the principal unit of work shall be performed between the hours of 7 a.m and 6 p.m. A calendar day will be charged regardless of weather or other conditions not under the control of the Contractor, unless the City Engineer approves, in writing, a suspension of time.

1.29 **BUSINESS DAY**: A business day is defined as a calendar day, not including Saturdays, Sundays, or legal holidays, between the hours of 8 a.m. and 5 p.m, during which business operations generally occur.

ABBREVIATIONS

A.A.S.H.T.O.	American Association of State Highway and Transportation Officials	Conc.	Concrete
A.S.T.M.	American Society for Testing and Materials	Diam. Cond. Corr.	Diameter Conduit Corrugated
Asph.	Asphalt	Culv.	Culvert
Ave.	Avenue	Dr.	Driveway
Blvd.	Boulevard	Elev.	Elevation
C.I.	Cast Iron	F.	Fahrenheit
C.L.	Center Line	Ft. or '	Foot or Feet
C.O.	Clean Out	Gal.	Gallon
Lb.	Pound	In. or "	Inch or Inches
M.H.	Manhole	Lin.	Linear
Max.	Maximum	R.O.W.	Right-of-Way
Min.	Minimum	Sq.	Square
Mono.	Monolithic	Std.	Standard
No.	Number	St.	Street
%	Percent	Str.	Strength
P.S.I.	Pounds per Square Inch	Vol.	Volume
R	Radius	Yd.	Yard
Reinf.	Reinforced	Cu.	Cubic

Table A

ITEM 2 - INSTRUCTIONS TO BIDDERS

2.1 PROPOSAL FORM

The City will furnish bidders with proposal forms, which will include the following:

- Project Data - Describes general location and work to be performed including any special concerns.
- Bid Proposal - An itemized list of work to be performed, materials to be furnished and the time the work is to be completed.

2.2 QUANTITIES IN PROPOSAL FORM

The quantities of the work and materials set forth in the proposal form or on the Plans approximately represent the work to be performed and materials to be furnished, and are for the purpose of comparing the bids on a uniform basis. Payment will be made by the City to the Contractor only for the actual quantities of work performed or materials furnished in accordance with the Plans and specifications, and it is understood that the quantities may be increased or decreased as hereinafter provided, without in any way invalidating the bid prices. Any item of work not covered in the proposal will not be paid for directly, but shall be considered as subsidiary to a regular bid item.

2.3 EXAMINATION OF PLANS, SPECIFICATIONS AND SITE OF THE WORK

Bidders are advised that the Plans, specifications, and other documents on file with the City Engineer shall constitute all the information, which the City will furnish. Bidders are required, prior to submitting any proposal, to read and thoroughly familiarize themselves with the specifications including but not limited to the General Provisions, Special Provisions, Project Data, Current B/CS Unified Technical Specifications and Details, Current Texas Department of Transportation (TxDOT) Standard Specifications, current TxDOT Material Specifications, proposal, contract, and bond forms carefully, to visit the site of the work, to examine carefully local conditions, to inform themselves by their independent research, tests, and investigations of the difficulties to be encountered and judge for themselves of the accessibility of the work and all attending circumstances affecting the cost of doing the work or time required for its completion, and obtain all information required to make an intelligent proposal. No information given by the City or any official thereof, other than that shown on the Plans and contained in the specifications, proposals, and other documents, shall be binding upon the City. Bidders shall rely exclusively upon their own estimates, investigations, tests and other data which are necessary for full and complete information upon which the proposal may be based. It is mutually agreed that submission of a proposal is evidence that the bidder has made the examination, investigations, and tests required herein.

2.4 BIDDER QUALIFICATIONS

Bidders who have not had a contract with the City of Bryan with in the last five years must furnish sufficient written evidence that single bonafide contracts, in excess of two-thirds (2/3) of the face amount of this bid, have been successfully and satisfactorily completed on work of a similar nature. This evidence shall be furnished on a statement of bidder's qualifications included with the bid, and shall show job locations, type of projects, contract amounts and dates completed. The bidder must also complete a felony conviction notification form for any person convicted of a felony that will be working on the project. Failure to submit this evidence shall be just cause for disqualification of the bid. The successful Bidder, at the discretion of the City Engineer, may be required to furnish a complete financial statement prepared and certified to by a Certified Public Accountant.

2.5 PREPARATION OF PROPOSAL

The Bidder shall submit his proposal on the forms furnished by the City. All blank spaces in the form shall be correctly filled in and the Bidder shall state the prices numerically, written legibly in ink or typed, for which he proposes to do the work contemplated or furnish the materials required. The numerical unit prices shall govern over all other numbers submitted on the proposal. If the proposal is submitted by an individual, his name must be signed by him or his duly authorized agent. If the proposal is submitted by a firm, association or partnership, the name and address of each member must be given and the proposal signed by a member of the firm, association, or partnership, or person duly authorized. If the proposal is submitted by a company or corporation, the company or corporate name and business address must be given, and the proposal signed by an official or duly authorized agent, Powers of Attorney, authorizing agents, or others to sign proposals must be properly certified and must be in writing and submitted with the proposal.

If the Bidder/Contractor is a corporation, the original seal of corporation must be affixed to the bid bond, payment bond, performance bond and contract. If these documents are presented without the corporate seal, bidder/contractor must present a certificate of good standing from the Texas Secretary of State and must also present a separate resolution of the corporation's directors for each document stating that the individual whose signature appears on the document was authorized by directors to sign it on behalf of the corporation.

All addendums shall be acknowledged on the bid proposal; failure to do so may result in an automatic disqualification of the bid.

2.6 IRREGULAR PROPOSALS

Proposals will be considered irregular if they show any omissions, alterations of form, additions, or conditions not called for, unauthorized alternate bids, or irregularities of any kind. However, the City reserves the right to waive any irregularities and to make the award in the best interests of the City.

2.7 PROPOSAL GUARANTY

No proposal will be considered unless it is accompanied by an acceptable Cashier's Check or acceptable Bidder's Bond, payable unconditionally to the City of Bryan, Texas. The cashier's check or bidder's bond shall be in the amount of, not less than, that shown in the bid proposal instructions. All bids shall remain subject to acceptance for 90 business days after the day of the bid opening, unless the City and the bidder mutually agree to extend past the first 90 business days, but the City may, at the City's sole discretion, release any bid and return the bid security before that date. The proposal guaranty is required by the City as evidence of good faith and as a guarantee that if notice of intent to award the contract is issued by the City, the Bidder will execute the contract within five (5) business days and will furnish the required bonds and insurance certificates within seven (7) business days after the receipt of the fully executed contract.

2.8 FILING OF PROPOSAL

No proposal will be considered unless it is filed with the Purchasing office at 1309 E. M.L. King Street, Bryan, Texas within the time limit for receiving proposals as stated in the advertisement. Each proposal shall be in a sealed envelope, plainly marked with the word, "Bid Proposal", and the name or description of the project as designated in the Notice to Bidders. The proposal shall include the Proposal Form, Felony Conviction Notice, Certification and Bonds. Statement of Contractor and References may also be submitted as part of the proposal.

2.9 WITHDRAWING PROPOSALS

A Bidder may withdraw his proposal provided his request in writing to do so is in the hands of the officials indicated in the Notice to Bidders by the time set for opening of proposals. A Bidder may change the unit prices in his proposal provided his request to do so is submitted in writing and is in the hands of the Purchasing Manager prior to the time set for opening of proposals. Requests by telephone, fax, or email for changes in bid prices or for withdrawal of proposals will not be considered.

2.10 OPENING PROPOSALS

The proposals filed with the Purchasing Manager will be opened and publicly read aloud as provided for in the Notice to Bidders, and shall thereafter remain on file with the Purchasing Manager. No contract will be entered into based on such proposals until after at least two days have elapsed. Bidders or their agents are invited to be present.

2.11 DISQUALIFICATION OF BIDDER

Bidders may be disqualified and their proposal not considered for any of the following specific reasons:

(a) Reason for believing collusion exists among the Bidders.

(b) Reasonable grounds for believing that any Bidder is interested in more than one proposal for the work contemplated.

(c) The Bidder being interested in any litigation against the City.

(d) The Bidder being in arrears on any existing contract or having defaulted on a previous contract.

(e) Lack of competency as revealed by the financial statement, experience and equipment, questionnaires, background investigation by the City, etc.

(f) Uncompleted work that in the judgment of the City will prevent or hinder the prompt completion of additional work if awarded.

(g) Proposals in which prices are unbalanced (disproportionately allocated among the bid items).

(h) The City of Bryan is adopting the written criteria for this project that Contractors with two (2) trench failure accidents including one (1) death resulting from trench failure in the last five (5) years will be grounds to disqualify bids. This disqualification is not automatic as the City reserves the right to study the corrective action and present preventative measure implied by Contractors who exceed these criteria.

ITEM 3 - AWARD AND EXECUTION OF CONTRACT

3.1 CONSIDERATION OF BIDS

After proposals are opened, the proposals will be tabulated for comparison on the basis of the bid prices and quantities shown in the proposal. The City of Bryan reserves the right to accept or reject any or all bids, to waive any informalities and technicalities, to accept the offer considered most advantageous **in order to obtain the best value for the City.** Causes for rejection of a bid may include but shall not be limited to the bidder's current violation of any City ordinance, the bidder's current inability to satisfactorily perform the work or service, or the bidder's previous failure to properly and timely perform its obligations under a contract with the City. Bidders may be disqualified and rejection of proposals may be recommended for any (but not limited to) of the following causes: 1) Failure to use the proposal form furnished by the City; 2) Lack of signature by an authorized representative on the proposal form; 3) Failure to properly complete the proposal; 4) Evidence of collusion among proposers; 5) Omission of uncertified personal or company check as a proposal guarantee **(if Bid Bond required)**; or 6) Unauthorized alteration of bid form. City reserved the right to waive any minor informality or irregularity.

All bidders are hereby notified that the City of Bryan shall consider all factors it believes to be relevant in selecting the offer that provides the best value for the City including, but not limited to the purchase price, the proximity of the bidder as it relates to the ability to perform the contract for the City of Bryan, the delivery date, the reputation of the bidder and the bidder's goods or services, the quality of the bidder's goods or services, the bidder's past performance under contracts with the City of Bryan, and the bidder's compliance with City ordinances. The City of Bryan may conduct reference checks as needed to evaluate bids. The Contractor will be required to submit a list of 6 references with each bid proposal. The City reserves the right to contact other companies or individuals that can provide information to the City that will assist the City in evaluating the capability of the bidder.

The City of Bryan, Texas is committed to obtaining its goods, products and services at the lowest price possible which benefits all the citizens of Bryan. Therefore, in order to accomplish this objective/goal, it is not the intention of the City neither to exclude particular vendors or manufacturers nor to create restrictive situations in its request for bids and proposals. Any manufacturer's names, trade names, brand names, catalog numbers, technical data, etc. used in the specifications are there for the sole purpose of establishing and describing general performance, quality levels, type and dimensions and such references are not intended to be restrictive. Alternate bids on similar or comparable products and/or services of any manufacturer or vendor equal to the products and/or services described in the specifications are invited and will be given careful consideration provided the alternate will accomplish the same task. The City of Bryan shall be the sole judge on whether the alternate product and/or service is similar to, equal to and in compliance with that specified. The decision of the City shall be final.

"In literal compliance" in reference to standards and specifications shall mean the meeting or exceeding of all or nearly all of the said standards and specifications. If the City determines that standards and specifications are in literal compliance where not all

standards and specifications have been met or exceeded, the City must base such a determination on its finding that any standards and specifications which have not been met or exceeded do not render the bidder product any less usable for the purpose for which it is intended.

3.2 AWARD OF CONTRACT

The City shall award the bid to obtain the best value to the City. The City's determination of best value determination may be based on a number of factors including but not limited to the following:

(a) the purchase price, including payment discount terms;
(b) the reputation of the bidder and of the bidder's goods or services;
(c) the quality of the bidder's goods or services;
(d) the extent to which the goods or services meet the City's needs;
(e) the bidder's past relationship with the City;
(f) the impact on the ability of the City to comply with laws and rules relating to contracting with historically underutilized businesses and nonprofit organizations employing persons with disabilities;
(g) the total long-term cost to the City to acquire the bidder's goods or services; and
(h) any relevant criteria specifically listed in this bid document.

The City reserves the right to withhold the award of the contract for a period of 90 business days from date of opening proposals. In no case will contract be awarded until at least two business days shall have elapsed from time of opening proposals. The City of Bryan reserves the right to award the bid in order to obtain the best value for the City.

3.3 RETURN OF PROPOSAL GUARANTY

As soon as proposal prices have been tabulated for comparison of bids, the City may, at its discretion, return the proposal guaranties accompanying the proposals which, in its judgment, would not be considered in the award; all other proposal guaranties will be retained by the City until the required contract and bonds have been executed, after which they will be returned. No proposal guaranties will be returned until at least two business days shall have elapsed from time of opening proposals.

3.4 PERFORMANCE AND PAYMENT BONDS

Within seven (7) business days after receiving the fully executed contract, the Contractor shall file with the City a good and sufficient performance bond in an amount equal to one hundred percent of the total amount of the contract, as evidenced by the proposal, guaranteeing the full and faithful execution of the work and performance of the contract.

When the contract amount is $25,000 or more, a performance and a payment bond in an amount of not less than one hundred percent (100%) of the contract price, conditioned upon faithful performance of the contract in accordance with the plans, specifications and contract documents and payment to all persons supplying labor and materials, and for the protection of the City and all other persons against damage by reason of negligence of the Contractor, or improper execution of the work, or the use of inferior materials shall be executed by the successful bidder and shall accompany the signed contract. Bonds shall

remain in full force and effect for one year after written notice of acceptance of the completed work is received from the City.

No sureties will be accepted by the City who are now in default or delinquent on any bonds or who are interested in any litigation against the City. All bonds shall be made on forms furnished by the City, and shall be executed by an approved surety company authorized to do business in the State of Texas and acceptable to the City. Each bond shall be executed by the Contractor and the sureties.

Should any surety on the contract be determined unsatisfactory at any time by the City Council, notice will be given the Contractor to that effect and the Contractor shall immediately provide a new surety satisfactory to the City. No payment will be made under the contract until the new surety or sureties, as required, have been accepted by the City.

No Performance and Payment bonds shall be required on any City contract less than $25,000.00. In the event that these bonds are not furnished by the Contractor, only one estimate (final) will be paid and that shall be upon completion of the project.

3.5 EXECUTION OF CONTRACT

The person or persons, partnership, company, firm, association, or corporation to whom a notice of intent to award a contract is provided shall, within five (5) business days after such notice, sign the necessary agreements and return four originals to the City. No contract shall be binding on the City until it has been attested by the City Secretary, approved as to form by the City Attorney, executed for the City by the designated City representative, and delivered to the Contractor.

If the Bidder/Contractor is a corporation, bidder/contractor must present a certificate of good standing from the Texas Secretary of State dated no more than 30 days preceding the date of submission of the bidder's proposal and must also present a separate resolution of the corporation's directors for each document stating that the individual whose signature appears on the document was authorized by directors to sign it on behalf of the corporation. All other business must provide proof of eligibility to conduct business in the State of Texas dated no more than 30 days preceding the date of submission of the bidder's proposal and evidence satisfactory to the City of Bryan that the bid and the contract and related documents have been duly authorized as applicable to the type of business entity.

3.6 FAILURE TO EXECUTE CONTRACT

The City of Bryan reserves the right to retain any bid bond as liquidated damages in the event the bidder withdraws its bid after the proposals are opened and before official rejection of the bid by the City, or, if successful in securing the award of the contract, the successful bidder fails to enter into the contract and fails to furnish satisfactory performance and payment bonds.

3.7 BEGINNING OF WORK

The Contractor shall not begin work until notified in writing by the City Engineer to do so.

ITEM 4 - SCOPE OF WORK

4.1 INTENT OF PLANS AND SPECIFICATIONS

The intent of the Plans and specifications is to prescribe a complete work or improvement, which the Contractor undertakes to do in full compliance with the Plans, specifications, special provisions, proposal and contract. Unless otherwise provided, the Contractor shall furnish all labor, tools, materials, machinery, equipment, and incidentals necessary for the proper prosecution and completion of the work.

4.2 SPECIAL PROVISIONS

Should any work or conditions which are not covered by these specifications be anticipated on any proposed work, "Special Provisions" for such work will be prepared by the City previous to the time of receiving the bids, and shall be considered as a part of the specifications and contract and complied by the Contractor.

4.3 INCREASED OR DECREASED QUANTITIES OF WORK

The City reserves the right to alter the quantities of work to be performed by either increasing or decreasing the quantities at any time when it is found necessary, and the Contractor shall perform the work as altered, increased or decreased, at the contract unit prices. Any allowance will not be made for anticipated profits nor shall such changes be considered as waiving or invalidating any conditions or provisions of the Contract and Bond.

4.4 ALTERATION OF PLANS AND SPECIFICATIONS

The City reserves the right to make such changes in the Plans and specifications and in the character of the work as may be necessary or desirable to insure completion in the most satisfactory manner, provided such changes do not materially alter the original Plans and specifications or change the general nature of the work as a whole. Such changes shall not be considered as waiving or invalidating any condition or provision of the contract and bond.

4.5 EXTRA WORK

When any work is necessary to the proper completion of the project for which no prices are provided for in the proposal and contract, the Contractor shall do such work, but only when and as ordered in writing by the City Engineer. Payment for extra work will be made by "Supplemental Agreement" as outlined in Item 9 - Measurement and Payment.

4.6 STORMWATER POLLUTION PREVENTION

The Contractor shall comply with the TCEQ Construction General Permit No. TXR 150000 and maintain appropriate SWPPP documentation on site.

The Contractor shall take precaution to prevent the deposition of mud from the construction site on adjoining property, roads, streets and alleys during construction.

These shall remain in a clean and usable condition. The contractor is responsible for providing erosion control measures during all phases of construction. Appropriate use of silt fence and storm sewer inlet protection is the contractor's responsibility and should be maintained throughout the projects duration. The contractor shall place plastic, wood, or another barrier between spoils and paved areas to prevent embedding into the pavement.

For waterline or sewer line construction, the Contractor shall keep adjacent streets and/or alleys in a clean and usable condition as the job progresses. All sedimentation control measures shall be maintained in an effective operating condition during construction. This will prevent removal of sediment and mud from the project by wind or water.

4.7 FINAL CLEANUP

Upon the completion of the work and before acceptance and final payment will be made, the Contractor shall clean and remove from the site of the work all surplus and discarded materials, temporary structures, and debris of every kind. All equipment shall be removed from the job site after completion or acceptance of the construction work. If excavated material is placed on private property, it shall be the Contractor's responsibility to provide the City Engineer with a written statement signed by the property owner stating that the property owner requested the material and is satisfied with the condition in which the property was left. All excavated material containing any oil based products or asphaltic products must be disposed of at a licensed sanitary landfill. All brush that is not burned must be disposed of at a licensed compost facility. The Contractor will be allowed to burn debris in the right of way, provided that he obtains a permit to burn said debris from the City of Bryan Fire Marshall twenty-four (24) hours in advance of any burning. Permits will be issued on a day to day basis only and the Contractor shall be totally responsible for any damage incurred due to burning. No brush, oil- based soil, or asphaltic products will be allowed to be placed on private property. Material is not to be placed in floodplain without prior approval by the City's Floodplain Administrator. The Contractor shall be totally responsible for any damage incurred due to illegal dumping. He shall leave the site of the work in a neat and orderly condition equal to that which originally existed. Surplus and waste materials removed from the site of the work shall be disposed of at a licensed sanitary landfill or as directed by the City Engineer. No payment will be made for this work, its cost being subsidiary to the various bid items.

ITEM 5 - CONTROL OF THE WORK

5.1 AUTHORITY OF THE CITY ENGINEER

All work shall be performed under the inspection of the City Engineer in a workmanlike manner and to the satisfaction of the City Engineer and in accordance with the contract, Plans and specifications. The City Engineer shall decide all questions which arise as to the quality and acceptability of materials furnished, work performed, rate of progress of the work, interpretation of the Plans and specifications, acceptable fulfillment of the Contract, compensations, mutual rights between Contractors under these specifications, and suspension of the work. The City Engineer shall determine the amount and quality of the work performed and materials furnished, and those decisions and estimates shall be final. The City Engineer's estimate of the amount of work done shall be a condition precedent to the right of the Contractor to receive money due him under the contract.

5.2 CONFORMITY WITH PLANS

All work shall conform to the lines, grades, cross-sections, details and dimensions shown on the Plans. Any deviation from the Plans that may be required by the contingencies of construction will be determined and authorized by the City Engineer. All shop or fabrication details shall be furnished by the Contractor and checked and approved by the City Engineer.

5.3 EXISTING STRUCTURES

The Plans show the locations of all known surface and subsurface structures, however, the location of many gas mains, water mains, conduits, sewers, etc. is unknown, and the City assumes no responsibility for failure to show any or all these structures on the Plans or to show them in their exact location. It is mutually agreed such failure will not be considered sufficient basis for claims for additional compensation for extra work or for increasing the pay quantities in any manner whatsoever, unless the obstruction encountered is such as to necessitate changes in the lines or grades, or require the building of special work, provisions for which are not made in the Plans and Proposal, in which case, at the decision of the City Engineer, the provisions in these specifications for extra work shall apply.

The Contractor shall exercise caution while working at a location where proposed construction crosses or comes into proximity with an underground telephone cables or wires, gas line, waterline, sewer line or any other utility line. EXTREME CAUTION shall be taken when working around petroleum pipeline or high pressure gas lines.

It shall be the Contractor's responsibility to contact the utility at least two (2) working days (excluding Saturday, Sunday and Holidays) prior to construction and obtain exact location of all underground utility lines and appurtenances where possibility of a conflict exists. The contractor shall coordinate with BTU for support with existing power poles, relocation of guy wires, and overhead lines. Unnecessary damage to utilities or appurtenances within and outside the limits of construction shall be repaired at the Contractor's expense.

It is the Contractor's responsibility to notify and coordinate any repair of utilities required for the proper construction of this project, including utilities owned by the City. If City of Bryan assistance is required for the repair, the contractor must give advanced notice so that a work order can be issued from the specific department. The attached Utility Notification Check-off List, included within this contract, shall be filled out and kept on-site during construction.

5.4 COORDINATION OF PLANS, SPECIFICATIONS, PROPOSAL AND SPECIAL PROVISIONS

The Plans, specifications, proposal, special provisions, and all supplementary documents are intended to describe a complete work and are essential parts of the contract. A requirement occurring in any of them is binding. In case of discrepancies, figured dimensions shall govern over scaled dimensions; Plans shall govern over specifications; special provisions shall govern over both Technical Specifications and Plans; quantities shown on the Plans shall govern over those shown in the Proposal. The Contractor shall not take advantage of any apparent error or omission in the Plans and specifications, and the City Engineer shall be permitted to make such corrections or interpretations as may be deemed necessary for the fulfillment of the intent of the Plans and specifications. In the event the Contractor discovers an apparent error or discrepancy, he shall immediately call this to the attention of the City Engineer.

5.5 COOPERATION OF CONTRACTOR

The Contractor shall give the work the consistent attention necessary to facilitate the progress thereof, and he shall cooperate with the City Engineer, his inspectors, and with other Contractors in every way possible. The Contractor shall provide all facilities to enable the City Engineer and his inspectors to inspect the workmanship and materials entering into the work.

5.6 CONSTRUCTION STAKES

The City Engineer will furnish the Contractor with all grades, lines and measurements necessary for proper prosecution and control of the work. It shall be the responsibility of the Contractor to provide and maintain all construction staking on this project necessary for the proper performance and control of the work. This work is to be performed under the direct supervision of a Registered Public Land Surveyor, licensed in the Sate of Texas. Certified cut sheets must be provided to the City Engineer before commencing work. All costs associated with surveying shall be subsidiary to the various bid items.

5.7 AUTHORITY AND DUTIES OF INSPECTORS

Inspectors will be authorized to inspect all work done and all materials furnished. In case of any dispute arising between the Contractor and the Inspector as to the materials furnished or the manner of performing the work, the Inspector will have authority to reject materials or suspend work until the question at issue can be referred to and decided by the City Engineer. The Inspector will not, however, be authorized to revoke, alter, enlarge, or release any requirement of these specifications, not to approve or accept any portion of work, nor to issue instructions contrary to the Plans and specifications. He will

in no case act as foreman, nor perform other duties for the Contractor, nor interfere with the management of the work.

5.8 PROJECT SAFETY

Where trench depths or other excavations exceed a depth of 5 feet, the Contractor must use protective devices as specified on OSHA Standard 29 CFR Part 1926, Subpart P and appendices thereto. A trench shoring plan in accordance with Vernon's Health and Safety Code Section 756.021 shall be submitted by the Contractor prior to issuance of a work order for this project. All soil for this project shall be classified as type "C" soil.

The "City of Bryan Excavation Policy" is hereby made part of these specifications and shall be adhered to for this project. The "Record of Excavation" form that is to be filled out by the Contractor at the time of excavation is included in this contract. A full copy of this policy is available for review at the City of Bryan City Engineering Division, and/or can be mailed upon request. For additional information about this requirement, contact City of Bryan Risk Management Services at (979) 209-5056.

The Contractor will be required to furnish and erect adequate protective devices (barricades, warning signs, lights, etc.) to ensure safe conditions once construction has begun. Barricades shall be painted in a color that will be visible at night.

The Contractor shall submit a Traffic Control Plan to the City Engineer, which must be approved before the Contractor begins work. The City Engineer reserves the right to change the Traffic Control Plan at anytime.

The Contractor will be held responsible for all damage to the work due to failure of barricades, signs, lights, and watchmen to protect it. Under any and all circumstances signs, barricades, lights, and other traffic control devices shall conform to the requirements of the Texas Manual on Uniform Traffic Control Devices with respect to design, application and maintenance.

5.9 INSPECTION

The Contractor shall furnish the City Engineer with every reasonable facility for ascertaining whether or not the work as performed is in accordance with the requirements and intent of the specifications and contract. Any work shall not be done nor materials used without suitable supervision or inspections.

5.10 REMOVAL OF DEFECTIVE AND UNAUTHORIZED WORK

All work, which has been rejected or condemned, shall be repaired or if it cannot be repaired satisfactorily, it shall be removed and replaced at the Contractor's expense. Defective materials shall be immediately removed from the site of the work. Work done without line and grades having been given, work done beyond the lines or not in conformity with the grades shown on the Plans or as given, save as herein provided, work done without proper inspection, or any extra or unclassified work done without written authority and prior agreement in writing as to prices shall be done at the Contractor's risk, and will be considered unauthorized, and at the option of the City Engineer may not be measured and paid for, and may be ordered removed at the Contractor's expense. Upon

failure of the Contractor to repair satisfactorily or to remove and replace, if so directed, rejected, unauthorized or condemned work or materials immediately after receiving notice from the City Engineer, the City Engineer will, after giving written notice to the Contractor, have the authority to cause defective work to be remedied or removed and replaced, or to cause unauthorized work to be removed and to deduct the cost thereof from any monies due to the Contractor.

5.11 FINAL INSPECTION

The City Engineer will make final inspection of all work included in the contract as soon as practicable after the work is completed and ready for acceptance. If the work is not acceptable to the City Engineer at the time of such inspection, he will inform the Contractor as to the particular defects to be remedied before final acceptance will be made.

5.12 PUNCH LIST INSPECTION

At the request of the Contractor, on or near the date construction has ended, the City shall conduct a punch list inspection to identify additional work to be done, improper or incomplete work to be corrected, or other deficiencies in the work, a list of which shall be provided to the Contractor. If all items on the list are not completed, corrected, or otherwise resolved within 20 calendar days of the date of publication of the list, the City may use the retainage held from the Contractor to complete the items on the list.

5.13 RECORD DRAWINGS

The Contractor shall furnish to the City, one set of clean, red-lined record drawings showing as-built conditions such as elevations, depth of bury for all utility lines, any deviations from contract drawings, etc. prior to final acceptance of the project. The cost of providing "Record Drawings" will be subsidiary to the various bid items. Final retainage will not be released until all required documents have been delivered and all changes have been incorporated. Record Drawings should contain certifications by the contractor and the engineer as follows:

The "record" drawings shall be prepared by the design engineer, under the guidance of the contractor, and shall bear a certification from the design engineer on the cover sheet as follows:

"(Date)_____ To the City of Bryan:
I certify that the improvements shown in this set of plans reflect any revisions of design of which I authorized, and/or any and all field changes of which I am aware."

The certification shall be executed by, and shall bear the seal and original signature of the professional engineer licensed in the state at the date of such certification.

The cover sheet shall also bear a certification from the general contractor as follows:

"(Date)_____ To the City of Bryan:
I certify that the improvements shown on in this set of plans were actually built, and that said improvements were built according to these plans. I further certify, to the best of my knowledge, that the materials of construction and sizes of manufactured items, if any, are stated correctly hereon."

ITEM 6 - CONTROL OF MATERIALS

6.1 SOURCE OF SUPPLY OF MATERIALS

The materials shall be of the best procurable as required by the Plans, specifications and special provisions. The Contractor shall not start delivery of materials until the City Engineer has approved the source of supply. Only materials conforming to these specifications shall be used in the work. The Contractor shall furnish approved materials from other sources, if for any reason the product from any source at any time before commencement or during the prosecution of the work proves unacceptable. After approval, any materials that have become unfit for use will not be permitted in the work.

6.2 SAMPLES AND TESTS OF MATERIALS

Where, in the opinion of the City Engineer or as called for in the specifications, tests of materials are necessary, such tests will be made at the expense of the City unless otherwise provided. The failure of the City to make any tests of materials shall in no way relieve the Contractor of his responsibility of furnishing materials conforming to the specifications. The Contractor shall furnish adequate samples without charge.

The Contractor shall submit to the City Engineer proof (manufacturer's certificates, test reports, mill reports, etc.) that all materials proposed for use in construction of this project meet the appropriate specifications. The City Engineer may require testing or retesting by an acceptable independent testing laboratory of any materials submitted for use in this project. If this testing indicates the materials to be unsatisfactory, the Contractor shall be required to pay for these tests, and supply materials that comply with said specification.

Standard control tests will be made during construction to determine that all materials and construction procedures meet the standards and specifications prescribed. The cost of tests performed on materials that do not comply with specifications shall be deducted from the monthly payments to the Contractor.

The City Engineer reserves the right to have the Contractor submit test reports by an independent testing lab showing construction materials conform to the City of Bryan Standard Specifications or referenced specifications.

6.3 STORAGE OF MATERIALS:

Materials shall be stored so as to insure the preservation of their quality and fitness for the work. When directed by the City Engineer, they shall be placed on wooden platforms or other hard, clean surfaces and not on the ground, and shall be placed under cover when directed. Stored materials shall be placed and located so as to facilitate prompt inspection. If material is stored on private property, the Contractor will provide the City Engineer with written approval of the property owner. No materials shall be stored within the limits of the FEMA regulated 100 year floodplain.

6.4 DEFECTIVE MATERIALS

All materials not conforming to the requirements of these specifications will be rejected and shall be removed immediately from the site of the work unless permitted to remain by the City Engineer. Upon failure on the part of the Contractor to comply with any order of the City Engineer made under the provisions of this item, the City Engineer will have authority to remove and replace defective material and to deduct the cost of removal and replacement from any money due to or become due the Contractor.

6.5 ARRANGEMENT AND CHARGE FOR WATER FURNISHED BY THE CITY

Where the Contractor desires to use City water in connection with any construction work, he shall make complete and satisfactory arrangements with the City for so doing. Where meters are used, the charge for water will be at the regular established rate; where no meters are used, the charge will be as prescribed by ordinance, or where no ordinance applies, payment shall be made on that estimated by the City.

6.6 PRODUCT SUBMITTALS

The Contractor shall provide product submittals as applicable and as outlined in the technical specifications for each project. These may include but are not limited to the following:

Work Plan indicating sequence and schedule
Material storage location
Subcontractors to be used with the percentage of work those subcontractors will complete
Test reports for all required tests identified in the specifications and plans
Hot Mix Asphaltic Concrete Mix Design
Portland Cement Concrete Mix Design
Cement sand
Steel rebar
Pipe material
Pipe fittings
Valves
Manholes
Fire hydrants

ITEM 7 - LEGAL RELATIONS AND PUBLIC RESPONSIBILITY

7.1 LAWS TO BE OBSERVED

The Contractor shall at all times observe and comply with all Federal and State laws and City Ordinances and regulations, which in any manner affect the conduct of the work, and shall observe and comply with all orders, laws, ordinances and regulations which exist or which may be enacted later by bodies having jurisdiction or authority for such enactment.

No plea of misunderstanding or ignorance thereof will be considered. The Contractor and his sureties shall indemnify and save harmless the City and all its officers, agents and employees against any claims or liability arising from or based on the violation of any such law, ordinance, regulation or order whether by himself or his employees, or sub-contractors.

7.2 PERMITS AND LICENSES

The Contractor shall obtain all permits and licenses, and give all notices necessary and incident to the due and lawful prosecution of the work. All City of Bryan fees for permits will be waived.

7.3 STATE AND CITY SALES TAXES

The Contractor's attention is directed to Texas House Bill 11 (72nd Legislature, 1st C.S.), which amended the Texas Tax Code Section 151.311. This amendment provides that by the Contractor entering into a separate contract, the Contractor will become a seller of materials purchased for the project, which will obviate paying taxes on materials incorporated into the project.

As a seller, the Contractor purchases materials and issues a resale certificate instead of paying the sales tax at the time of purchase. The City, as an exempt entity, will provide the Contractor with an exemption certificate at the time of the "sale" of the materials to the City, thereby precluding the City, and Contractor, from paying the sales tax on the materials.

Services are not tax exempt. The Contractor will be required to pay all appropriate taxes for all services as set forth herein.

For purpose of these Contract Documents, the following definitions are provided for materials and services:

> Materials: Materials are those items that are tax exempt and are physically incorporated into the facility constructed for the City. Materials include, but are not limited to, purchased items such as the filters, pumps, valves, pipe, fittings, concrete, asphalt, road-base and sub-base, electrical equipment, building components, etc.

Services: Services are those items that are not tax exempt and are items used by the Contractor but that are not physically incorporated into the City's facility and/or are items which are consumed by construction. Services include, but are not limited to items, such as supplies, tools, concrete form, scaffolding, temporary storage buildings, the purchase or rental or lease of equipment, skill and labor, etc.

For further information concerning taxes as they related to materials and services, the Contractor shall refer to House Bill 11 and/or contact the Texas Comptroller of Public Accounts, Austin, Texas.

7.4 PATENTED DEVICES, MATERIALS AND PROCESSES

If the Contractor is required or desires to use any design, device, material or process covered by letters patent or copyrighted he shall provide for such use by suitable legal agreement with the patentee or owner. It is mutually agreed and understood that without exception, contract prices shall include all royalties or costs arising from patents, trademarks and copyrights in any way involved in the work. The Contractor and his sureties shall indemnify and save harmless the City from any and all claims for infringement by reason of the use of any such patented design, device, materials or process or any trademark or copyright in connection with the work agreed to be performed under this contract and shall indemnify the City for any cost, expense, or damage which it may be obliged to pay by reason of such infringement at any time during the prosecution of the work or after completion of the work.

7.5 SANITARY PROVISIONS

The Contractor shall establish and enforce among his employees such regulations in regard to cleanliness and disposal of garbage and waste as will tend to prevent the inception and spread of infectious or contagious diseases and to prevent effectively the creation of a nuisance about the work on any property either public or private, and such regulations as are required by the City Engineer shall be put into immediate force and effect by the Contractor. The necessary sanitary conveniences for the use of laborers on the work, properly secluded from public observation, shall be constructed and maintained by the Contractor in such manner and at such points as will be approved by the City Engineer, and their use shall be strictly enforced by the Contractor. All sanitary laws and regulations of the State of Texas and the City of Bryan shall be strictly complied with.

7.6 PUBLIC CONVENIENCE AND SAFETY

Materials stored about the work shall be so placed, and the work shall at all times be so conducted as to cause no greater obstruction to the public than is considered necessary by the City Engineer. The Contractor shall make provisions by bridges or other means at all cross streets, highways, sidewalks, and private driveways for the free passage of pedestrians and vehicles, provided that where bridging is impractical or unnecessary in the opinion of the City Engineer, the Contractor may make arrangements satisfactory to the City Engineer for the diversion of traffic and shall, at his own expense, provide all material and perform all work necessary for the construction and maintenance of roadways and bridges for the diversion of traffic.

The City reserves the right to remedy any neglect on the part of the Contractor as regards the public convenience and safety which may come to its attention, after twenty-four hours notice in writing to the Contractor, save in cases of emergency, when it shall have the right to remedy any neglect without notice; and in either case, the cost of such work done by the City shall be deducted from monies due or to become due the Contractor. The Contractor shall notify the City Engineer when any street is closed or obstructed and when directed by the City Engineer shall keep any street or streets in condition for unobstructed use by the fire apparatus. Where the Contractor is required to construct temporary bridges or make other arrangements for crossings over ditches or streams, his responsibility for accidents shall include the roadway approaches as well as the structures for such crossings.

The Contractor shall conform to all federal, state and local safety regulations and specifically follow those contained in the City of Bryan Safety policy and procedures manual.

7.7 PRIVILEGES OF CONTRACTOR IN STREETS, ALLEYS AND RIGHT-OF-WAYS

For the performance of the contract, the Contractor will be permitted to occupy such portion of streets or alleys, or other public places or other right-of-ways as provided for in the ordinances of the City, as shown on the Plans or as permitted by the City Engineer. A reasonable amount of tools, materials and equipment for construction purposes may be stored in such space, but not more than is necessary to avoid delays in the construction. Excavation and waste materials shall be piled or stacked in such a way as not to interfere with spaces that may be designated to be left free and unobstructed, and not inconvenience occupants of adjoining property. Other Contractors of the City may, for all purposes required by their contracts, enter upon the work and premises used by the Contractor, and the Contractor shall give to other Contractors of the City all reasonable facilities and assistance for the completion of adjoining work. Any additional grounds desired by the Contractor for his use shall be provided him at his own expense.

7.8 RAILWAY CROSSINGS

Where the work encroaches upon any right-of-way of any railway, the City will secure the necessary easement for the work. Where railway tracks are to be crossed, the Contractor shall observe all the regulations and instructions of the railway company as to methods of doing work, or precautions for safety of property and the public. All negotiations with the railway company, except for right- of-way, shall be made by the Contractor. The railway company shall be notified by the Contractor not less than five days previous to time of his intentions to begin work. The Contractor will not be paid direct compensation for such railway crossing, but shall receive only the compensations as set out in the proposal.

7.9 BARRICADES, LIGHTS AND WATCHMEN

Where the work is carried on in, or adjacent to any street, alley or public place, the Contractor shall at his own cost and expense furnish and erect such barricades, fences, lights, and danger signals, shall provide such watchmen and shall take such other precautionary measures for the protection of persons or property and of the work as are

necessary. Barricades shall be painted in a color that will be visible at night. From sunset to sunrise, the Contractor shall furnish and maintain at least one light at each barricade. A sufficient number of barricades shall be erected to keep vehicles from being driven on or into any work under construction. The Contractor shall furnish watchmen in sufficient number to protect the work.

The Contractor will be held responsible for all damage to the work due to failure of barricades, signs, lights, and watchmen to protect it, and whenever evidence is found of such damage, the City Engineer may order the damaged portion immediately removed and replaced by the Contractor at his own expense. The Contractor's responsibility for the maintenance of barricades, signs and lights, and for providing watchmen, shall not cease until the project shall have been accepted by the City.

Under any and all circumstances, signs, barricades, lights and other traffic control devices shall conform to the requirements of the Texas Manual on Uniform Traffic Control Devices with respect to design, application and maintenance. As required by the City Engineer, the Contractor will submit a traffic control plan. The City Engineer reserves the right to modify the plan at any time.

7.10 CONFINED SPACE ENTRY

The Contractor shall verify that safe working conditions are maintained for all confined space entries in accordance with OSHA 29CFR 1910.126 "Permit Required Confined Spaces", ANSI Z117.1 "Safety Requirements for Confined Spaces" and NIOSH 80-106 "Criteria for a Recommended Standard for Working in a Confined Space". All confined spaces must be evaluated as either permit required or low hazard permit spaces by a person knowledgeable in these regulations before entry.

A "Permit Required for Confined Space" is any space employees can bodily enter and perform assigned work, which by design has limited openings for entry and exit, has the potential for engulfment or hazardous gases or which is not intended for continuous employee occupancy.

A "Low Hazard Permit Space" is a permit space where there is an extremely low likelihood that dangerous gases or engulfment hazards could be present and where all other serious hazards have been controlled.

7.11 USE OF EXPLOSIVES

The use of explosives is prohibited on City Projects.

7.12 PROTECTION AND RESTORATION OF PROPERTY

Where the work passes over or through private property, the City will provide the necessary right-of-way. The Contractor shall not enter upon private property for any purpose without having previously obtained permission from the property owner. The Contractor shall be responsible for the preservation of, and shall use every precaution to prevent damage to, all trees, shrubbery, plants, lawns, fences, culverts, bridges, pavements, driveways, sidewalks, etc., to all water, sewer, and gas lines, to all conduits, to all overhead pole lines, and appurtenances thereof; and to all other public or private

property, along or adjacent to the work. The Contractor shall notify the proper representatives of any public utility, corporation, any company or individual, not less than forty-eight hours in advance of any work which might damage or interfere with the operation of their or his property along or adjacent to the work. The Contractor shall be responsible for all damages or injury to property of any character resulting from any act, omission, neglect, or misconduct in the manner of executing the work, or due to his non-execution of the work, or any time due to defective work or materials, and said responsibility shall not be released until the work shall have been completed and accepted.

When and where any direct or indirect damage or injury is done to public or private property on account of any act, omission, neglect or misconduct in the execution of the work or in consequence of the non-execution thereof on the part of the Contractor, he shall restore or have restored at his own expense such property to a condition equal to or better than that existing before such damage or injury was done, by repairing, rebuilding, or otherwise restoring as may be directed, or he shall make good such damage from injury in a manner acceptable to the owner or the City Engineer. In case of failure on the part of the Contractor to restore such property or make good such damage or injury; the City Engineer may, upon forty-eight (48) hours written notice, under ordinary circumstances and without notice when a nuisance or hazardous condition results, proceed to repair, rebuild, or otherwise restore such property as may be determined necessary, and the cost thereof will be deducted from any monies due or to become due the Contractor under his contract.

7.13 RESPONSIBILITY FOR DAMAGE CLAIMS (INDEMNIFICATION)

The Contractor shall defend, indemnify and save harmless the City and all its officers, agents (including the Engineer of Record), and employees from all suits, actions, or claims of any character, name and description including attorney's fees, expenses brought for or on account of any injuries or damages received or sustained by any person or persons or property, by or from the said Contractor or his employees or by or in consequence of any negligence in safeguarding the work of through the use of unacceptable materials in constructing the work, or by or on account of any act or omission, neglect or misconduct of the said Contractor, or by or on account of any claims of amounts recovered under the Workmen's Compensation Law or any other law, ordinance, order or decree, and so much of the money due the said Contractor under and by virtue of his contract as shall be considered necessary by the City may be retained for the use of the City, or in case no money is due, his sureties shall be held until suit or suits, action or actions, claim or claims for injury or damages as aforesaid shall have been settled and satisfactory evidence to the effect furnished the City. Contractor shall defend, indemnify and save harmless the City, its officers, agents (including the Engineer of Record), and employees in accordance with this indemnification clause regardless of whether the injury of damage is caused in part by the City, its officers, agents (including the Engineer of Record), or employees.

7.14 PUBLIC UTILITIES AND OTHER PROPERTY TO BE CHANGED

In case it is necessary to change or move the property of any owner or of a public utility, such property shall not be moved or interfered with until ordered to do so by the City

Engineer. The right is reserved to the owner of public utilities to enter upon the limits of the contract for the purpose of making such changes or repairs of their property that may be necessary by performance of the contract. The City reserves the right of entering upon the limits of the contract for the purpose of repairing or relaying the sewer and water lines and appurtenances, repairing structures, etc., and making other repairs, changes, or extensions to any City property.

7.15 USE OF A SECTION OR PORTION OF THE WORK

Wherever in the opinion of the City Engineer any section or portion of the work or any structure is in suitable condition, it may be put into use upon the written order of the City Engineer, and such usage shall not be held to be in any way an acceptance of said work or structure or any part thereof or as a waiver of any of the provisions of these specifications or the contract pending final completion and acceptance of the work; all necessary repairs and removals or any section of the work so put into use, due to defective materials or workmanship or to operations of the Contractor shall be performed by the Contractor at his own expense.

7.16 CONTRACTOR'S RESPONSIBILITY FOR THE WORK

Until written acceptance by the City Engineer, as provided for in these specifications, the work shall be under the charge and care of the Contractor, and he shall take every necessary precaution to prevent injury or damage to the work or any part thereof by action of the elements or from any other cause whatsoever, whether arising from the execution or non-execution of the work.

7.17 NO WAIVER OF LEGAL RIGHTS

Inspection of any order, measurement, quantity, or certificate by the City Engineer, any order by the City for payment of money, any payment for or acceptance of any work, or any extension or time, or any possession taken by the City, shall not operate as a waiver of any provisions of the Contractor or any power therein reserved to the City of any rights or damages therein provided. Any waiver of any breach of Contract shall not be held to be a waiver of any other or subsequent breach. The City reserves the right to correct any error that may be discovered in any estimate that may have been paid and to adjust the same to meet the requirements of the contract and specifications. The City reserves the right to claim and recover by process of law sums as may be sufficient to correct any error or make good any deficiency in the work resulting from such error, dishonesty or collusion, upon the conclusive proof of collusion or dishonesty by the Contractor or his agents, discovered in the work after the final payment has been made.

7.18 CONTRACTOR'S INSURANCE

The contractor agrees to maintain the coverages, endorsements, and limits in accordance with and set forth by the Insurance Coverage & Limit Table below for the duration of this contract. The Contractor agrees to:

- Deliver to the City Certificate(s) of Insurance evidencing that such policies are in full force and effect not later than 5 business days after notification of the City's intent to award a contract, but in any event prior to commencement of work. If policy

endorsements are necessary, satisfactory evidence of request to insurance carrier must accompany the Certificate(s) of Insurance. Failure to meet these requirements may cause the bid to be rejected.

- Submit any policy endorsements within 30 days of the City's intent to award contract. No payment will be made and/or the City may stop work or terminate the contract if contractor fails to supply satisfactory evidence of policy endorsements.
- Allow the City the right to obtain complete, certified copies of all required insurance policies at any time.
- Clearly indicate contract name and contract number to which Certificate(s), endorsements, and policies apply.

The requirements as to types and limits, as well as the City's review or acceptance of insurance coverage to be maintained by Contractor, is not intended to nor shall in any manner limit or qualify the liabilities and obligations assumed by the Contractor.

WORKERS' COMPENSATION INSURANCE & EMPLOYERS' LIABILITY INSURANCE – Statutory & $500,000/$500,000/$500,000 The Contractor agrees to maintain Worker's Compensation Insurance & Employers Liability. In the event any work is sublet, the Contractor shall require the subcontractor similarly to provide the same coverage and shall himself acquire evidence of such coverage on behalf of the subcontractor. Contractor waives all rights against the City of Bryan for recovery of damages to the extent these damages are covered by the workers' compensation and employers' liability or umbrella liability insurance obtained by Contractor. Waiver of subrogation in favor of the City required. This requirement may be waived with satisfactory evidence that the Contractor is sole proprietor(s)/has no employees.

COMMERCIAL GENERAL LIABILITY INSURANCE – Limit of liability not less than $1,000,000 per occurrence Contractor agrees to maintain a standard ISO version Commercial General Liability occurrence form, or its equivalent providing coverage for, but not limited to, Bodily Injury and Property Damage, Premises/Operations, Products/Completed Operations, Independent Contractors, and liability assumed under an insured contract including the tort liability of another assumed in a business contract. No coverage shall be deleted from the standard policy without notification of individual exclusions and acceptance by the City. The City of Bryan shall be listed as an additional insured.

BUSINESS AUTOMOBILE LIABILITY INSURANCE – Limit of liability not less than $1,000,000 per occurrence Contractor agrees to maintain a standard ISO version Business Automobile Liability, or its equivalent, providing coverage for all owned, non-owned and hired automobiles. Contractor waives all rights against the City of Bryan for recovery of damages to the extent these damages are covered by the business auto policy or umbrella liability insurance obtained by Contractor or under any auto physical damage coverage. Should the Contractor not own any automobiles and furnish satisfactory evidence of this, the business auto liability requirement shall be amended to allow the Contractor to agree to maintain only Hired & Non-Owned Auto Liability. This amended coverage requirement may be satisfied by way of endorsement to the Commercial General Liability, or separate Business Auto policy.

UMBRELLA or EXCESS LIABILITY Contractor may satisfy the minimum liability limits required for Commercial General Liability and Business Auto Liability under an Umbrella or Excess Liability policy. The annual aggregate limit shall not be less than the highest "each occurrence" limit. Contractor agrees to endorse City as an additional insured, unless the Certificate states the Umbrella or Excess Liability provides coverage on a pure "True Follow Form" basis.

CONTRACTOR'S INSURANCE TO BE PRIMARY Contractor's insurance shall be deemed primary with respect to any insurance or self insurance carried by the City for liability arising out of operations under the contract.

WAIVER OF SUBROGATION: Waiver of subrogation in favor of the City of Bryan for each required policy. When required by the insurer or should a policy condition not permit Contractor to enter into a pre-loss agreement to waive subrogation without an endorsement, then Contractor agrees to notify the insurer and request the policy be endorsed with a Waiver of Transfer of rights of Recovery Against Others, or its equivalent. This Waiver of Subrogation requirement shall not apply to any policy, which includes a condition specifically prohibiting such an endorsement, or voids coverage should Contractor enter into such an agreement on a pre-loss basis.

DEDUCTIBLES, COINSURANCE PENALTIES, & SELF-INSURED RETENTION: Any deductibles or self-insured retentions must be declared. Contractor shall agree to be fully and solely responsible for any costs or expenses as a result of a coverage deductible, coinsurance penalty, or self-insured retention; including any loss not covered because of the operation of such deductible, coinsurance penalty, or self-insured retention.

RIGHT TO REVIEW AND ADJUST: The City reserves the right to review these requirements and to modify insurance coverage and their limits when deemed necessary and prudent. Furthermore, the City reserves the right, but not the obligation, to review and reject any insurer providing coverage because of poor financial condition.

SUBCONTRACTOR'S INSURANCE: The Contractor shall agree to cause each subcontractor employed by Contractor to purchase and maintain insurance of the type specified, provided the Contractor's insurance does not afford coverage on behalf of the subcontractor.

CONTRACTOR'S INSURANCE FOR OTHER LOSSES: Contractor shall assume full responsibility for all loss or damage from any cause whatsoever to any tools owned, rented or used in connection with the Contract including any tools, machinery, equipment, storage devices, containers, sheds, temporary structures, scaffolding, fences, forms, braces, jigs, screens, bracket, vehicles and the like owned or rented by Contractor, or Contractor's agents, subcontractors, suppliers, or employees. Contractor shall require any applicable insurance for this physical damage to provide a waiver of a right of subrogation against the City.

CERTIFICATE OF INSURANCE Contractor shall furnish the City with a certificate(s) of insurance, executed by a duly authorized representative of each insurer, showing compliance with the insurance requirements. The certificate must be from a company with an A.M. Best rating of "A-VI" or better and/or otherwise acceptable to the City. Certificates must be submitted using the ACORD form and all endorsements must be included with the submittal. Certificates showing proof of such insurance shall be submitted to the City prior to commencement of services under this Agreement. Further, it shall be the obligation of the Contractor to advise the City by written notice within two days of the cancellation or substantive change of any insurance policy set out herein, and failure to do so shall be construed to be a breach of this Agreement.

Failure of the City to demand such certificate(s) or other evidence of full compliance with these insurance requirements or failure of the City to identify a deficiency from evidence that is provided shall not be construed as a waiver of Contractor's obligation to maintain such insurance.

In the event the City is notified that a required insurance coverage will cancel or non-renew during the contract period, the Contractor shall agree to furnish prior to the expiration of such insurance, a new or revised certificate(s) as proof that equal and like coverage is in effect. The City reserves the right, but not the obligation, to withhold payment to Contractor until coverage is reinstated. If the Contractor fails to maintain the required insurance, the City shall have the right, but not the obligation, to purchase the required insurance at Contractor's expense.

Certificates and notices should be given to the City at the following address:

City of Bryan
Attn: Risk Management Department
300 S. Texas Ave.
Bryan, TX 77803

Upon request, the Contractor shall furnish the City of Bryan with certified copies of all insurance policies within 10 days of the City's written request.

INDEMNIFICATION:

The Contractor shall defend, indemnify and save harmless the City and all its officers, agents (including the Engineer of Record), and employees from all suits, actions, or claims of any character, name and description including attorney's fees expenses brought for or on account of any injuries or damages received or sustained by any person or persons or property, by or from the said Contractor or his employees or by or in consequence of any negligence in safeguarding the work, or through the use of unacceptable materials in construction of the work, or by or on account of any act or omission, neglect or misconduct of the said Contractor, or by or on account of any claims of amounts recovered under the Workmen's Compensation Law or any other law, ordinance, order or decree, and so much of the money due the said Contractor under and by virtue of this contract as shall be considered necessary by the City may be retained for the use of the City, or in case no money is due, his sureties shall be held until suit or suits, action or actions, claim

or claims for injury or damages as aforesaid shall have been settled and satisfactory evidence to that effect furnished the City. Contractor shall defend, indemnify and save harmless the City, its officers, agents (including the Engineer of Record), and employees in accordance with this indemnification clause regardless of whether the injury or damage is caused in part by the City, its officers, agents or employees.

7.19 ANTITRUST

Contractor hereby assigns to the City any and all claims for overcharges associated with this contract which arise under the antitrust laws of the United States, 15 U.S.C.A. Sec. 1 et seq. (1973).

ITEM 8 - PROSECUTION AND PROGRESS

8.1 SUBLETTING THE WORK

If the Contractor sub-lets any part of the work to be done under this contract, he will not under any circumstances be relieved of his responsibility and obligations. All transactions of the City Engineer will be with the Contractor. Subcontractors will be considered only in the capacity of employees or workmen, and shall be subject to the same requirements as to character and competency. The City will not recognize any subcontractor on the work as having any binding authority relative to the contractual obligations of the Contractor. The Contractor shall at all times, when the work is in progress, be represented by a qualified designated representative. Contractor shall remove and replace subcontractors or workers if Contractor or City deem it necessary to prevent harm to workers, the work or City's property. The contractor shall provide the City with qualification statements from all subcontractors.

8.2 ASSIGNMENT OF CONTRACT

The Contractor shall not assign, transfer, convey or otherwise dispose of the contract or his rights, title or interest in or to the same, or any part thereof, without the previous consent of the City expressed by resolution of the City Council and concurred in by the sureties. If the Contractor does, without such previous consent, assign, transfer, convey or otherwise dispose of the contract or of his right, title or interest therein, or any part thereof to any person or persons, partnership, company, firm or corporation, or by bankruptcy, voluntary or involuntary, or by assignment under the insolvency laws, of any state, attempt to dispose of the contract or make default in or abandon said contract, then the contract may at the option of the City be revoked and annulled, unless the sureties shall successfully complete said contract, and any monies due or to become due under said contract shall be retained by the City as liquidated damages for the reason that it would be impracticable and extremely difficult to fix the actual damages.

8.3 PROSECUTION OF THE WORK

The Contractor shall begin the work to be performed under the contract within fifteen (15) calendar days after the date of the authorization to begin work and shall continuously prosecute same with such diligence as will enable him to complete the work within the time limit specified. He shall notify the City Engineer at least twenty-four (24) hours before beginning work at any point. He shall not open up work to the detriment of work already begun. The beginning, sequence, and prosecuting of the work shall be governed by the orders of the City Engineer, and the Contractor shall conduct his operations so as to impose a minimum interference to the public. The Contractor shall be required to attend construction progress meetings as scheduled by the City Engineer throughout the construction of this project. The City Engineer may require these meetings as often as necessary to facilitate communication and coordination between the owner and Contractor. Before the beginning of construction and at each progress meeting, the Contractor shall submit to the City Engineer a detailed construction and sequence schedule for review. The work plan shall be continually updated and detailed enough so that the City Engineer can determine potential effects on traffic, construction signing, and the overall project schedule.

8.4 LIMITATION OF OPERATIONS

The work shall be so conducted as to create a minimum amount of inconveniences to the public. At any time when in the judgment of the City Engineer the Contractor has obstructed or closes or is carrying on operations on a greater portion of the street or public way than is necessary for the proper execution of the work, the City Engineer may require the Contractor to finish the sections of work which is in progress before operations are started on any additional section.

8.5 CHARACTER OF WORKMEN AND EQUIPMENT

The Contractor shall employ such superintendents, foremen and workmen as are careful and competent, and the City Engineer may demand the dismissal of any person or persons employed by the contractor, in, about or on the work who shall misconduct himself or be incompetent or negligent in the proper performance of his or their duties or neglect or refuse to comply with the directions of the City Engineer, and such person or persons shall not be employed thereon again without the written consent of the City Engineer.

The Contractor shall furnish such equipment as is considered necessary for the prosecution of the work in an acceptable manner, and at a satisfactory rate of progress.

8.6 COMPUTATION OF CONTRACT TIME FOR COMPLETION

The Contractor shall complete the work within the number of working days or calendar days stated in the contract. For the purpose of computation, working days will begin on the date indicated in the written authorization by the City Engineer to proceed.

The City Engineer will furnish the Contractor a monthly statement on forms furnished by the City, showing number of working days charged during the month, total number of working days allowed in contract, and the working days remaining under the contract. The Contractor will be allowed ten (10) days in which to protest the correctness of the statement, otherwise the statement will stand. If the satisfactory completion of the contract shall require unforeseen work or work and materials in greater amounts or quantities than those set forth in the contract, then additional working days or suspension of time charge will be allowed the Contractor equal to the time which, in the opinion of the City Engineer, the work as a whole is delayed.

8.7 SUBSTANTIAL COMPLETION

The Contractor shall notify the City Engineer when, in the Contractor's opinion, the contract is Substantially Completed. Within ten (10) calendar days after the Contractor has given the City Engineer written notice that the work has been Substantially Completed, the City Engineer shall inspect the work for the preparation of a final punch list.

(a) If the City Engineer and the City find that the work is not Substantially Completed, then they shall so notify the Contractor who shall then complete the work. City Engineer shall not be required to provide a list of unfinished work.

(b) If the City Engineer and City find that the work is Substantially Completed, the City shall issue to the Contractor its certificate of Substantial Completion.

The Substantial Completion of the work shall not excuse the Contractor from performing all of the work undertaken, whether of a minor or major nature, and thereby completing the Project in accordance with the Contract Documents.

8.8 FINAL COMPLETION

The work shall reach Final Completion and be ready for final payment within **thirty (30) calendar days** from the date of Substantial Completion and shall notify the City Engineer. If the City Engineer and the City accept and deems such work Finally Complete, then Contractor shall be so notified and certificates of completion and acceptance, as provided herein, shall be issued. A complete itemized statement of this Agreement account, certified by the City Engineer as correct, shall then be prepared and delivered to Contractor. Contractor or City, as the case may be, shall pay the balance due as reflected by said statement within thirty (30) calendar days.

The Contractor shall procure all required certificates of acceptance or completions issued by state, municipal, or other authorities and submit the same to the City. The City may withhold any payments due under this Agreement until the necessary certificates are procured and delivered.

Neither the final payment nor any acceptance nor certificate nor any provision of this Agreement shall relieve the Contractor of any responsibility for faulty workmanship or materials. At the option of the City, the Contractor shall remedy any defects and pay for any damage to other work which may appear after final acceptance of the work.

8.9 FAILURE TO COMPLETE ON TIME

The time of completion is the essence of the contract. For each working or calendar day that any work shall remain uncompleted (including any remaining items of work 30 days beyond Substantial Completion) after the time specified in the Proposal and the Contract, or the increased time granted by the City, or as increased by work or materials ordered as provided in Section 8.6, the sum per day given in the following schedule, unless otherwise specified in the Special Provisions, will be deducted from the monies due the Contractor, not as a penalty but as administrative costs.

AMOUNT OF CONTRACT $ TO $	AMOUNT OF ADMINISTRATIVE COSTS PER DAY $
0 to 10,000	200
10,000 to 25,000	300
25,000 to 50,000	400
50,000 to 100,000	500
100,000 to 500,000	600
500,000 to 1,000,000	700
1,000,000 to 2,000,000	800
2,000,000 to _____	1000

The time for the Substantial and Final Completion of the work described herein are reasonable times for the completion of each, taking into consideration all conditions, including but not limited to the average climatic conditions and usual industrial conditions prevailing in this locality. The amount of administrative damages for the Contractor's failure to meet the deadlines for Substantial and/or Final Completion are fixed and agreed on by the Contractor because of the impracticability and extreme difficulty in fixing and ascertaining the actual damages that the City would in such an event sustain. The amounts to be charged are agreed to be damages the City would sustain and shall be retained by the City from current periodic estimates for payment or from final payment.

As a result of the difficulty in estimation, calculation and ascertainment of City's damages due to a failure of Contractor to achieve timely completion of the Work, if the Contractor should neglect, fail, or refuse to either Substantially Complete or Finally Complete the work within the time herein specified, or any proper extension thereof granted by the City Engineer, then the Contractor does hereby agree as part of the consideration for the awarding of this Agreement that the City may permanently withhold from the Contractor's total compensation the sum as shown on the table above for each and every calendar day that the Contractor shall be in default after the time stipulated for Substantial Completion and/or Final Completion, not as a penalty, but as administrative costs incurred by the City as a result of the Contractor's delay. It is specifically understood that the assessment of administrative costs may be made for any failure to meet either or both of the deadlines specified for Substantial Completion and/or Final Completion.

The sum of money thus deducted for such delay, failure or non-completion is not to be considered as a penalty, but shall be deemed, taken and treated as reasonable administrative costs, since it would be impracticable and extremely difficult to fix the actual losses incurred by the City as a result of the Contractor's delay.

8.10 SUSPENSION BY COURT ORDER

The Contractor shall suspend such part or parts of the work ordered by the Court, and will not be entitled to additional compensation by virtue of such court order. Neither will he be liable to the City in the event the work is suspended by such Court Order.

8.11 TEMPORARY SUSPENSION

The City Engineer shall have the authority to suspend the work wholly or in part for such period or periods as he may deem necessary due to unsuitable weather conditions or any other conditions as are considered unfavorable for the suitable prosecution of the work. If it should become necessary to stop work for an indefinite period, the Contractor shall store all materials in such manner that they will not obstruct or impede the public unnecessarily nor become damaged in any way, and he shall take every precaution to prevent damage or deterioration of the work performed, he shall provide suitable drainage about the work and erect temporary structures where necessary. The Contractor shall not suspend work without written authority from the City Engineer, and shall proceed with the work promptly when notified by the City Engineer to resume operations. The "Time Charge" will be suspended during any such period of suspension.

8.12 SUSPENSION OF WORK AND ANNULMENT OF CONTRACT

The work or any portion of the work under contract shall be suspended immediately on written order of the City Engineer, a copy of such notice to be served on the Contractor's sureties, or the contract may be annulled by the City for any good cause or causes, among others of which special reference is made to the following:

(a) Failure of the Contractor to begin the work within the time specified.

(b) Substantial evidence that the progress of the work being made by the Contractor is insufficient to complete the work within the specified time.

(c) Failure of the Contractor to provide sufficient and proper equipment for properly executing the work.

(d) Substantial evidence that the Contractor has abandoned the work.

(e) Substantial evidence that the Contractor has become insolvent or bankrupt, or otherwise financially unable to carry on the work.

(f) Deliberate failure on the part of the Contractor to observe any requirements of these specifications or to comply with any orders given by the City Engineer as provided for in these specifications.

(g) Failure of the Contractor to promptly make good any defects in materials or workmanship, or any defects of any nature, the correction of which has been directed in writing by the City Engineer.

(h) Substantial evidence of collusion for the purpose of illegally obtaining a contract or perpetrating fraud on the City in the construction of work under contract.

When the work is suspended for any of the causes itemized above, or for any other cause or causes, the Contractor shall discontinue the work or such part thereof as the City shall designate, whereupon the sureties may at their option assume the contract or that portion thereof which the City has ordered the Contractor to discontinue, and may perform the same or may, with the written consent of the City, sub-let the work or that portion of the work so taken over, provided, however, that the sureties shall exercise their option within 15 days after the written notice to discontinue the work has been served upon the Contractor and upon the sureties or their agents. The sureties in such event shall assume the Contractor's place in all respects, and shall be paid by the City for all work performed by them in accordance with the terms of the contract. All monies remaining due the Contractor at the time of his default shall thereupon become due and payable to the sureties as the work progresses, subject to all terms of the contract. In case the sureties do not, within the herein above specified time, exercise their right and option to assume the contract or that portion thereof which the City has ordered the Contractor to discontinue, then the City shall have the power to complete by contract or otherwise, as it may determine, the work herein described or such part thereof as it may deem necessary, and the Contractor hereto agrees that the City shall have the right to take possession of and use any of the materials, plant, tools, equipment, supplies, and property of every kind provided by the Contractor for the purpose of this work and to procure other tools, equipment and materials for the completion of the same, and to charge to the account of the Contractor the expense of said contract for labor, materials, tools, equipment and expenses incident thereto. The expense so charged shall be deducted by the City out of such monies as may be due or may at any time thereafter become due the Contractor under and by virtue of the contract or any part thereof. The City shall not be required to obtain the lowest bid for the work of completing the contract, but the expenses to be deducted shall be the actual cost of such work. In case such expense is less than the sum which would have been payable under the contract if the same had been completed by the Contractor, then in such case the City may pay to the Contractor the difference in the cost, provided that the Contractor shall not be entitled to any claim for damages or for loss of anticipated profits. In case such expense shall exceed the amount which would have been payable under the contract if the same had been completed by the Contractor, then the Contractor and his sureties shall pay the amount of such excess to the City on notice from the City of the excess due. When any particular part of the work is being carried on by the City by contract or otherwise under the provisions of this section, the Contractor shall continue the remainder of the work in conformity with the terms of the contract, and in such manner as in no wise to hinder or interfere with the performance of workmen employed as above provided by the City.

8.13 TERMINATION OF CONTRACT

The contract will be considered fulfilled, save as provided in any maintenance stipulations, bond, or by law, when all work has been completed, the final inspection made by the City Engineer, and final acceptance and final payment made by the City.

ITEM 9 - MEASUREMENT AND PAYMENT

9.1 MEASUREMENT OF QUANTITIES

The determination of quantities of work acceptably completed under the terms of the contract, or as directed by the City Engineer in writing, will be made by the City Engineer, based on measurements made by the City Engineer. These measurements will be taken according to the U.S. Standard measurements used in common practice and will be the actual length, area, solid contents, numbers and weights.

9.2 SCOPE OF PAYMENT

The Contractor shall receive and accept the compensation, as herein provided, in full payment for furnishing all labor, tools, materials, equipment and incidentals; for performing all work contemplated and embraced under the contract; for all loss or damage arising out of the nature of the work, or from the action of the elements; for any unforeseen defects or obstruction which may arise or be encountered during the prosecution of the work, and before its final acceptance by the City Engineer; for all risks of whatever description connected with the prosecution of the work; for all expense incurred by or in consequence of suspension or discontinuance of such prosecution of the work as herein specified; for any infringement of patents, trademarks, or copyrights, and for completing the work in an acceptable manner according to the Plans and specifications. The payment of any current or partial estimate prior to final acceptance of the work by the City shall in no way constitute an acknowledgment of the acceptance of the work, nor in any way prejudice or affect the obligation of the Contractor to repair, correct, renew, or replace, at his own expense, any defects or imperfections in the construction, or in the strength or quality of the materials used in or about construction of the work under contract and its appurtenances nor any damage due or attributed to such defects, which defects, imperfections, or damage shall have been discovered on or before the final inspection and acceptance of the work. The City Engineer shall be the sole judge of such defects, imperfections, or damage, and the Contractor shall be liable to the City for failure to correct the same, as provided herein.

Any item of work not covered in the proposal will not be paid for directly, but shall be considered as subsidiary to a regular bid item.

9.3 PAYMENT FOR EXTRA WORK

The extra work done by the Contractor and authorized and approved by the City Engineer will be paid for in the manner hereinafter described and the compensation thus provided shall be accepted by the Contractor as payment in full for all labor, materials, tools, equipment and incidentals and all superintendents and timekeepers services, all insurance, bond and all other overhead expense incurred in the prosecution of the extra work. Payment for extra work will be made by one of the following methods:

(a) Method "A" - By unit prices agreed on in writing by the City Engineer and approved by the City before the said work is commenced, subject to all other conditions of said contract.

(b) Method "B" - By lump sum price agreed on in writing by the City Engineer and the Contractor and approved by the City before said extra work is commenced, subject to all other conditions of the contract.

For emergency field changes, the Contractor shall not proceed with any work that would require a Change Order to the contract without verbal approval, followed up by written approval of the City Engineer. The Contractor shall execute a project Change Order within one (1) working day of the Notice to Proceed with Emergency Work.

Under normal working conditions (non-emergency), the Contractor will not proceed with the required work identified in a Change Order until an approved Change Order is provided to the Contractor.

9.4 PARTIAL ESTIMATES

By the 5th day of each month, the Contractor will make an approximate estimate of the value of the work done during the month under these specifications and submit the estimate to the City Engineer for review. The City Engineer will review the payment request and an approved payment will be made by the 25th day of the same month. The partial estimate may include acceptable non-perishable materials delivered to the worksite for which an invoice on vendor letter head is provided. The percent retained by the City will be ten percent (10%) on all partial estimates of the total amount of work completed. Five percent (5%) will be retained by the City on all partial estimates if the contract amount is four hundred thousand dollars ($400,000) or more. The Contractor shall furnish the City of Bryan such detailed information as requested to aid in evaluating partial estimates. It is understood that the partial monthly estimates and payments will be subject to review and correction by the City of Bryan of the estimate rendered following discovery of an error in the current and any previous estimate, and no such estimate shall in any respect be taken as an admission of the City of the amount of work done or of its quality of sufficiency nor as an acceptance of the work or the release of the Contractor of any of his responsibility under the contract. No partial or monthly estimates will be made on contracts with a value of less than twenty five thousand dollars ($25,000).

9.5 FINAL ACCEPTANCE

Whenever the improvement provided for by the contract shall have been completely performed on the part of the Contractor, the Contractor shall notify the City Engineer that the improvements are ready for final inspection. The City Engineer will then make such final inspection, and if the work is satisfactory and in accordance with the Specifications and Contract, he will give the Contractor a written Letter of Acceptance.

9.6 FINAL PAYMENT

Whenever the improvements provided for by the contract shall have been completely performed on the part of the Contractor as evidenced by the City Engineer in the Letter of Acceptance, a final estimate showing the value of the work will be prepared by the City Engineer as soon as the necessary measurements and computations can be made. All prior estimates upon which payments have been made are subject to necessary corrections or revisions in the final payment. The amount of this final estimate less any

sums previously paid under the provisions of the contract, will be paid the Contractor within thirty (30) days after final acceptance provided the Contractor has furnished the City satisfactory evidence that all sum of money due for any labor, materials, apparatus, fixtures, or machinery furnished for and used in the prosecution of the work, or that the person or persons to whom the same may respectively be due have consented to such final payment. The acceptance by the Contractor of the last payment as aforesaid shall operate as and shall release the City from all claims and liabilities under the contract or for any act or neglect of said City relating to or connected with the contract.

Prior to Final Payment, the Contractor shall provide a notarized affidavit stating that all bills for labor, materials, and supplies incurred have been paid in full, that any claims from manufacturers, suppliers, and subcontractors have been released, and that there are no claims pending of which the Contractor has been notified. Failure to do so will result in liquidated damages at a rate as specified in the Contract.

9.7 GUARANTEE OF WORK

The Contractor shall guarantee the work which he does against defective materials and workmanship for a period of one (1) year from the date of a letter of final acceptance by the City of Bryan, Texas. Should defective materials or workmanship occur, the Contractor shall have seven (7) working days, after written notice of same is given to him by the City of Bryan, Texas, to make any and all repairs at his own expense. If the Contractor fails to correct the defect within the seven (7) working days, then the City may make the necessary repairs and charge the Contractor with the actual cost of all labor, materials and equipment time required.

The Contractor shall have his Performance Bond to continue for one (1) year after final acceptance of the work to cover the guarantee as set forth above.

CERTIFICATE OF LIABILITY INSURANCE

DATE (MM/DD/YYYY)

THIS CERTIFICATE IS ISSUED AS A MATTER OF INFORMATION ONLY AND CONFERS NO RIGHTS UPON THE CERTIFICATE HOLDER. THIS CERTIFICATE DOES NOT AFFIRMATIVELY OR NEGATIVELY AMEND, EXTEND OR ALTER THE COVERAGE AFFORDED BY THE POLICIES BELOW. THIS CERTIFICATE OF INSURANCE DOES NOT CONSTITUTE A CONTRACT BETWEEN THE ISSUING INSURER(S), AUTHORIZED REPRESENTATIVE OR PRODUCER, AND THE CERTIFICATE HOLDER.

IMPORTANT: If the certificate holder is an ADDITIONAL INSURED, the policy(ies) must be endorsed. If SUBROGATION IS WAIVED, subject to the terms and conditions of the policy, certain policies may require an endorsement. A statement on this certificate does not confer rights to the certificate holder in lieu of such endorsement(s).

PRODUCER

SAMPLE

CONTACT NAME:

PHONE (A/C, No, Ext): FAX (A/C, No):

E-MAIL ADDRESS:

INSURER(S) AFFORDING COVERAGE	NAIC #
INSURER A :	
INSURER B :	
INSURER C :	
INSURER D :	
INSURER E :	
INSURER F :	

INSURED

COVERAGES **CERTIFICATE NUMBER:** **REVISION NUMBER:**

THIS IS TO CERTIFY THAT THE POLICIES OF INSURANCE LISTED BELOW HAVE BEEN ISSUED TO THE INSURED NAMED ABOVE FOR THE POLICY PERIOD INDICATED. NOTWITHSTANDING ANY REQUIREMENT, TERM OR CONDITION OF ANY CONTRACT OR OTHER DOCUMENT WITH RESPECT TO WHICH THIS CERTIFICATE MAY BE ISSUED OR MAY PERTAIN, THE INSURANCE AFFORDED BY THE POLICIES DESCRIBED HEREIN IS SUBJECT TO ALL THE TERMS, EXCLUSIONS AND CONDITIONS OF SUCH POLICIES. LIMITS SHOWN MAY HAVE BEEN REDUCED BY PAID CLAIMS.

INSR LTR	TYPE OF INSURANCE	ADDL INSR	SUBR WVD	POLICY NUMBER	POLICY EFF (MM/DD/YYYY)	POLICY EXP (MM/DD/YYYY)	LIMITS	
	GENERAL LIABILITY							
	■ COMMERCIAL GENERAL LIABILITY						EACH OCCURRENCE	$ 1,000,000
	☐ CLAIMS-MADE ■ OCCUR						DAMAGE TO RENTED PREMISES (Ea occurrence)	$ 50,000
							MED EXP (Any one person)	$ 5,000
							PERSONAL & ADV INJURY	$ 1,000,000
							GENERAL AGGREGATE	$ 1,000,000
	GEN'L AGGREGATE LIMIT APPLIES PER:						PRODUCTS - COMP/OP AGG	$ 1,000,000
	☐ POLICY ■ PRO-JECT ☐ LOC							$
	AUTOMOBILE LIABILITY						COMBINED SINGLE LIMIT (Ea accident)	$ 1,000,000
	■ ANY AUTO						BODILY INJURY (Per person)	$
	☐ ALL OWNED AUTOS ☐ SCHEDULED AUTOS						BODILY INJURY (Per accident)	$
	☐ HIRED AUTOS ☐ NON-OWNED AUTOS						PROPERTY DAMAGE (Per accident)	$
								$
	☐ **UMBRELLA LIAB** ☐ OCCUR						EACH OCCURRENCE	$
	☐ **EXCESS LIAB** ☐ CLAIMS-MADE						AGGREGATE	$
	☐ DED ☐ RETENTION $							$
	WORKERS COMPENSATION AND EMPLOYERS' LIABILITY						■ WC STATU-TORY LIMITS ☐ OTH-ER	
	ANY PROPRIETOR/PARTNER/EXECUTIVE OFFICER/MEMBER EXCLUDED? **(Mandatory in NH)** Y / N ☐	N / A					E.L. EACH ACCIDENT	$ 500,000
	If yes, describe under DESCRIPTION OF OPERATIONS below						E.L. DISEASE - EA EMPLOYEE	$ 500,000
							E.L. DISEASE - POLICY LIMIT	$ 500,000

DESCRIPTION OF OPERATIONS / LOCATIONS / VEHICLES (Attach ACORD 101, Additional Remarks Schedule, if more space is required)

City of Bryan shall be named as additional insured on all Commercial General Liability policies. Workers Compensation and Employer's Liability policies to include a Waiver of Subrogation in favor of the City of Bryan. (All endorsements must be provided when available.)

CERTIFICATE HOLDER

City of Bryan
Attn: Risk Management Department
300 S. Texas Ave
Bryan, Tx 77803

CANCELLATION

SHOULD ANY OF THE ABOVE DESCRIBED POLICIES BE CANCELLED BEFORE THE EXPIRATION DATE THEREOF, NOTICE WILL BE DELIVERED IN ACCORDANCE WITH THE POLICY PROVISIONS.

AUTHORIZED REPRESENTATIVE

© 1988-2010 ACORD CORPORATION. All rights reserved.

The ACORD name and logo are registered marks of ACORD

C O N T R A C T

THE STATE OF TEXAS }
COUNTY OF BRAZOS }

THIS MEMORANDUM OF AGREEMENT this day made and entered into by and between the City of Bryan, a Municipal Corporation, and ELLIOTT CONSTRUCTION, L.L.C "Contractor",

W I T N E S S E T H

1.

That for the consideration hereinafter agreed to be paid by the City of Bryan, the said Contractor undertakes, covenants, and agrees to perform the work herein contracted to be done, in every detail conforming to the advertisement, proposal, specifications including special provisions, general provisions, plans or working drawings, and special agreements, on a certain public work described as:

FIRST STREET UTILITY & STREET REHABILITATION PROJECT

CITY JOB NO. 332-411-425-611-DE-1401

for the not to exceed sum of **Four Hundred Fourteen Thousand Seventy Eight Dollars and Fifty Cents**. ($ **414,078.50**)

2.

The Contractor hereby agrees to commence work under this Contract on a date to be specified in a work order of the City Engineer, and to complete fully all work hereunder within 120 WD working days thereafter. The Contractor further agrees to pay as administrative costs the sum of $600 for each consecutive calendar day used over and above the above mentioned work time.

3.

The City agrees that by the 5th day of each month the Contractor will make an approximate estimate of the value of the work done during the month under the Contract. Whenever the said estimates of work done since the last previous estimate exceeds $500.00 in amount, 90% of such estimated sum will be paid to the Contractor on or before the 25th day of the same month. When the contract amount is $400,000.00 or more, 95% of such estimated sum will be paid. The partial estimate may include acceptable, non-perishable materials delivered to the work. Such payment will be allowed on a basis of 100% of net invoice value. The Contractor shall furnish the City of Bryan such detailed information as may be requested to aid as a guide in evaluating partial estimates.

4.

It is further mutually agreed that should it appear to the City, or to the Engineer in charge that at any time during the existence of this Contract, the sureties on the said Contractor's bond have become insolvent, bankrupt, or otherwise financially unable to protect the City under the terms of the said Contract, the City may demand the said Contractor to furnish additional security in some approved surety company satisfactory to the City: the act of the City or the Engineer, with reference to demanding new or additional security, shall never be construed to relieve the original sureties of their obligation under the said Contract, or in any way to relieve the Contractor. The City may stop the said work under the Contract until additional security has been furnished by the said Contractor, and the City shall in no case be liable to the said Contractor on account thereof. The City may exercise its rights as provided in the attached specifications to take charge of the said work in the event of the refusal or failure of the Contractor to comply with the demands of the City with reference to furnishing additional security.

5.

That in consideration of the Contractor fully and faithfully complying with all the terms, provisions, and stipulations of this contract, the City of Bryan undertakes, covenants, and agrees to pay to the said Contractor for the furnishing of all material and labor, and the performance of the work herein contracted for the following sums or prices as shown by the attached proposal of bid of the Contractor, which said prices shall be the full compensation to be received by the said Contractor under the terms of this contract: Performable and enforceable in Brazos County, Texas.

IN TESTIMONY WHEREOF, the City of Bryan has caused this instrument to be signed in its corporate name, and on its behalf, by its Mayor thereof, attested by its City Secretary, with its corporate seal affixed, and the said Elliott Construction, LLC thereby binding themselves, their heirs, successors, assigns, and representatives for the faithful and full performance of the terms and provisions of this contract, individually, jointly and severally.

EXECUTED in duplicate original this_____day of_____, 20____, at Bryan, Texas, where this contract is performable and enforceable.

Party of the First Part
CITY OF BRYAN, TEXAS

Approved as to Form:

_____
Janis Hampton – City Attorney

Approved:

BY: _____
Jason P. Bienski - Mayor

Prepared and Recommended:

_____
W. Paul Kaspar, P.E. – City Engineer

Attest:

_____
Mary Lynne Stratta - City Secretary

Approved for Processing:

_____
Jayson Barfknecht, P.E., Ph.D
Director of Public Works

Approved for Council:

_____
Kean Register – City Manager

Party of the Second Part
(CONTRACTOR)

BY: _____
President

Attest:

_____
Witness

Bond No. _____

PERFORMANCE BOND

STATE OF TEXAS
COUNTY OF

KNOW ALL MEN BY THESE PRESENTS That Elliott Construction, LLC of the City of Wellborn , County of Brazos, and State of Texas, as principal, and_____ _____ _____ authorized under the laws of the State of Texas to act as surety on bonds for principals, are held and firmly bound unto the City of Bryan of Brazos County, Texas (Owner), in the penal sum of **Four hundred fourteen thousand seventy eight dollars and 50 cents** ($ **417,078.50**) for the payment whereof, the said Principal and Surety bind themselves and their heirs, administrators, executors, successors and assigns, jointly and severally by these presents:

WHEREAS, the Principal has entered into a certain written contract with the Owner, dated the day_____of_____, 20____, to furnish all labor, materials and equipment necessary for completing First Street Utility & Street Rehabilitation Project City Job No. 332-411-425-611-DE-1401

which contract is hereby referred to and made a part hereof as fully and to the same extent as if copied at length herein.

NOW, THEREFORE, THE CONDITION OF THIS OBLIGATION IS SUCH, that if the said Principal shall faithfully perform said Contract and shall in all respects duly and faithfully observe and perform all and singular the covenants, conditions and agreements in and by said contract agreed and covenanted by the Principal to be observed and performed, and according to the true intent and meaning of said Contract and the Plans and the Specifications hereto annexed, then this obligation shall be void; otherwise to remain in full force and effect;

PROVIDED, HOWEVER, that this bond is executed pursuant to the provisions of Chapter 2253, Government Code, Vernon's Texas Civil Statues and all liabilities on this bond shall be determined in accordance with the provisions of said Code to the same extent as if it were copied at length herein.

Surety, for value received, stipulates and agrees that no change, extension of time, alteration or addition to the terms of the contract, or to the work performed thereunder, or the plans, specifications or drawings accompanying the same, shall in anywise affect its obligation on this bond, and it does hereby waive notice of any such change, extension of time, alteration or addition to the terms of the contract, or to the work to be performed thereunder. Performable and enforceable in Brazos County, Texas.

time, alteration or addition to the terms of the contract, or to the work to be performed thereunder. Performable and enforceable in Brazos County, Texas.

IN WITNESS WHEREOF, the said Principal and Surety have signed and sealed this instrument this _____ day of _____ , 20 _____ .

_____	_____
Principal	Surety
By _____	Title _____
Title _____	Title _____
Address _____	Address _____
_____	_____

The name and address of the Resident Agent of Surety is:

_____

_____

Corporation Seal if Corporation.

Bonding Company Seal if Bonding Company.

Bond No. _____

PAYMENT BOND

STATE OF TEXAS
COUNTY OF

KNOW ALL MEN BY THESE PRESENTS That Elliott Construction, LLC
of the City of Wellborn, County of Brazos, and State of Texas, as principal, and ___
_____
authorized under the laws of the State of Texas to act as surety on bonds for principals, are held and firmly bound unto the City of Bryan of Brazos County, Texas (Owner), in the penal sum of **Four hundred fourteen thousand seventy eight dollars and 50 cents** ($ **414078.50**) for the payment whereof, the said Principal and Surety bind themselves and their heirs, administrators, executors, successors and assigns, jointly and severally by these presents:

WHEREAS, the Principal has entered into a certain written contract with the Owner, dated the
_____day of_____, 20_____, to furnish all labor, materials and equipment necessary for completing First Street Utility & Street Rehabilitation Project
City Job No. 332-411-425-611-DE-1401

which Contract is hereby referred to and made a part hereof as fully and to the same extent as if copied at length herein.

NOW, THEREFORE, THE CONDITION OF THIS OBLIGATION IS SUCH, that if the said Principal shall pay all claimants supplying labor and materials to him or a subcontractor in the prosecution of the work provided for in said contract, then, this obligation shall be void; otherwise to remain in full force and effect;

PROVIDED, HOWEVER, that this bond is executed pursuant to the provisions of Chapter 2253, Government Code, Vernon's Texas Civil Statues and all liabilities on this bond shall be determined in accordance with the provisions of said Code to the same extent as if it were copied at length herein.

Surety, for value received, stipulates and agrees that no change, extension of time, alteration or addition to the terms of the contract, or to the work performed thereunder, or the plans, specifications or drawings accompanying the same, shall in anywise affect its obligation on this bond, and it does hereby waive notice of any such change, extension of time, alteration or addition to the terms of the contract, or to the work to be performed thereunder. Performable and enforceable in Brazos County, Texas.

IN WITNESS WHEREOF, the said Principal and Surety have signed and sealed this instrument this _____ day of _____ , 20_____.

_____	_____
Principal	Surety
By _____	Title _____
_____	
Title _____	Title _____
Address _____	Address _____
_____	_____

The name and address of the Resident Agent of Surety is:

_____

_____

Corporation Seal if Corporation.

Bonding Company Seal if Bonding Company.

CONTRACTOR'S AFFIDAVIT OF BILLS PAID

STATE OF TEXAS §

COUNTY OF BRAZOS §

Personally, before me the undersigned authority, on this day appeared _____ , who being duly sworn, on oath, says that he is the legal representative of _____ _____and that Contract No._____ _____ for the construction of the project designated as _____ _____ has been completed in accordance with the Plans and Specifications and Contract Documents, and that all bills for materials, apparatus, fixtures, machinery, and labor used in connection with the construction of this project have, to the best of his knowledge and belief, been fully paid.

BY: _____
Representative for the Contractor

SWORN TO AND SUBSCRIBED BEFORE ME this the _____ day of , 20_____ .

_____

Notary Public in and for
Brazos County, Texas

(S E A L)