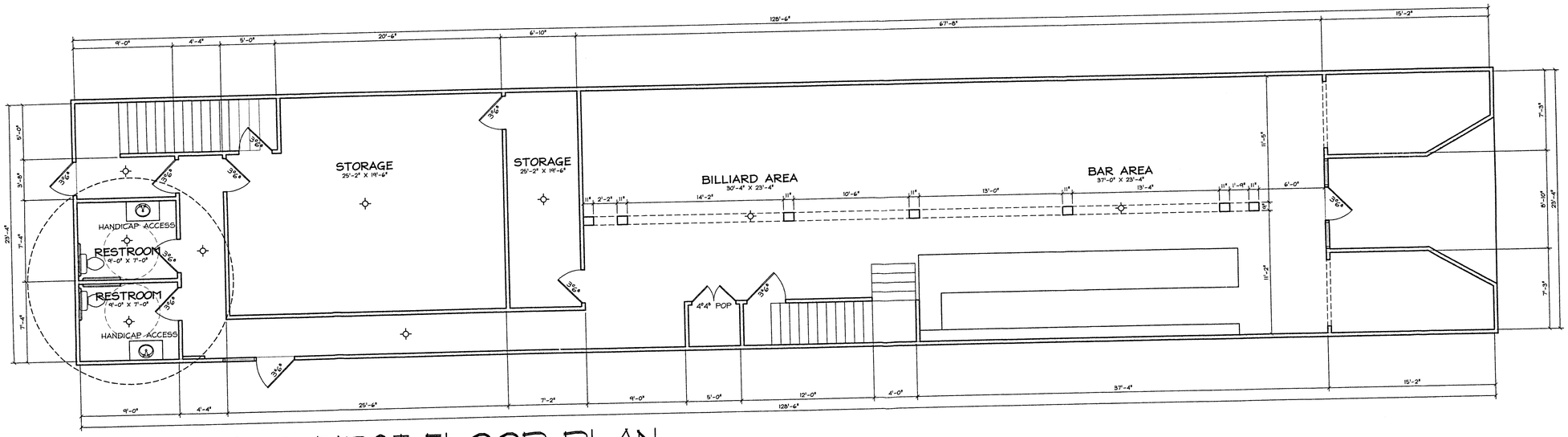

01 PROPOSED FIRST FLOOR PLAN

REFERENCE: NONE

SCALE: 3/16"=1'-0"

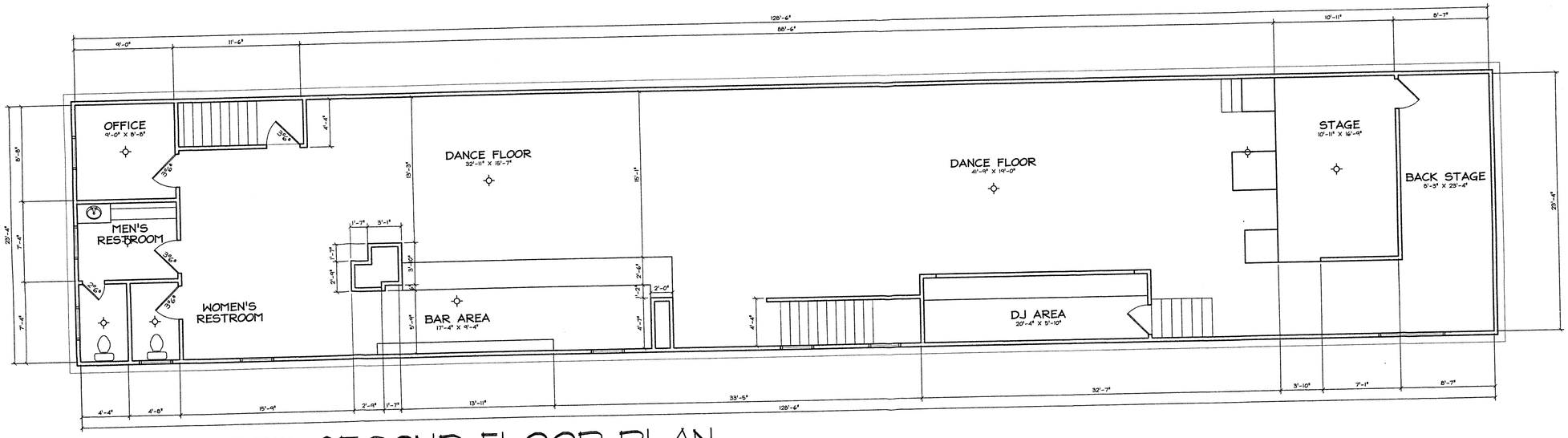

02 PROPOSED SECOND FLOOR PLAN

REFERENCE: NONE

SCALE: 3/16"=1'-0"

SCALE: 3/16"

REGISTERED ARCHITECT
MANNY M. ROSSMAN
8258
STATE OF TEXAS

10-23-15

SQUARE FOOTAGE	
1ST FLOOR HEATED	2,845.0#
2ND FLOOR HEATED	2,909.5#
TOTAL HEATED	5,754.0#
FOUNDATION	5,754.0#

ALL DRAWINGS, PLANS, AND SPECIFICATIONS ARE PROPERTY OF MM DESIGN. PURCHASER'S RIGHT IS CONDITIONAL AND LIMITED TO A ONE-TIME USE TO CONSTRUCT A SINGLE PROJECT ON THE LOT STATED HEREIN. THE USE OR REPRODUCTION OF THESE PLANS CONCERNING ANY OTHER CONSTRUCTION IS STRICTLY PROHIBITED WITHOUT WRITTEN PERMISSION OF MM DESIGN IN COLLEGE STA, TX. M-M DESIGN IS NOT AN ENGINEERING FIRM NOR AN ARCHITECTURAL FIRM. WE ARE NOT QUALIFIED NOR ARE WE LICENSED TO DESIGN STRUCTURAL FRAMING OR FOUNDATIONS. A LICENSED PROFESSIONAL ENGINEER SHOULD BE CONSULTED REGARDING STRUCTURAL FRAMING AND FOUNDATIONS. SHOULD AN ENGINEER'S SEAL BE PRESENT ON THE DRAWING, THEN THE "ENGINEER OF RECORD" SHALL BEAR THE SOLE RESPONSIBILITY FOR THE STRUCTURAL DESIGN. M-M DESIGN WILL NOT BE HELD RESPONSIBLE FOR THE STRUCTURAL DESIGN AND/OR ANY PROBLEMS THAT MAY ARISE REGARDING THE DESIGN.

M-M DESIGN
RESIDENTIAL-COMMERCIAL
MANNY M. ROSSMAN
1811 LONGMIRE DR.
COLLEGE STATION
TEXAS 77845
OFC.: (979) 693-7004
FAX: (979) 693-7005
MOBIL: (979) 229-9243

SCHAEFER / ANDERSON BUILDING

FLOOR PLAN

DATE: 08/24/15
PROJECT: SH-15-194
DRAWN: SRM
CHECKED: SRM
HEATED: 5,754.0#
SLAB: 5,754.0#
REVISION: NONE

SHEET NUMBER

A-1.2

SHEET 02 OF 02

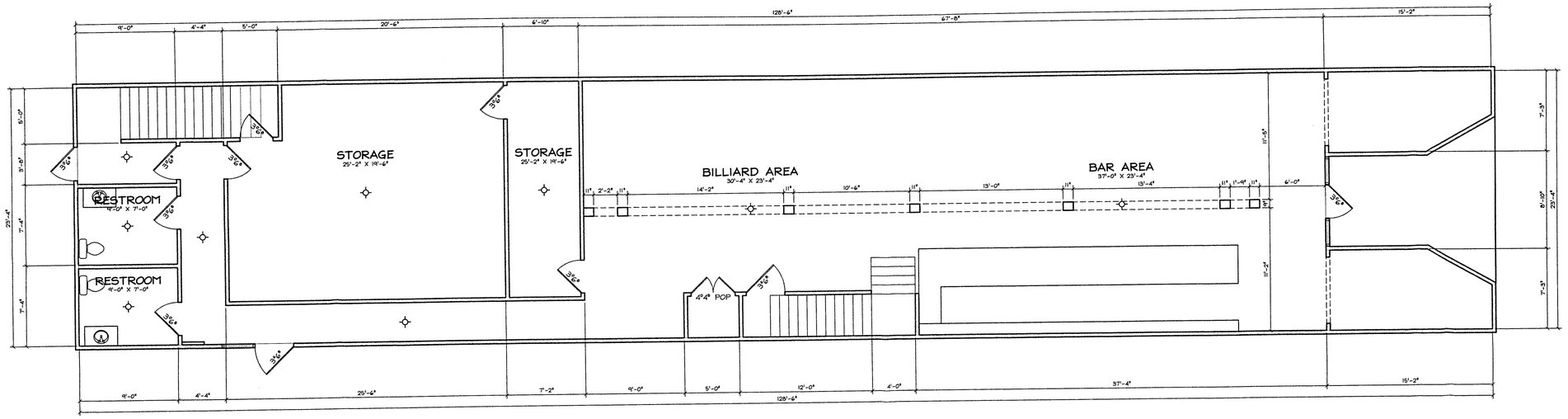

01 EXISTING FIRST FLOOR PLAN

REFERENCE: NONE SCALE: 3/16"=1'-0"

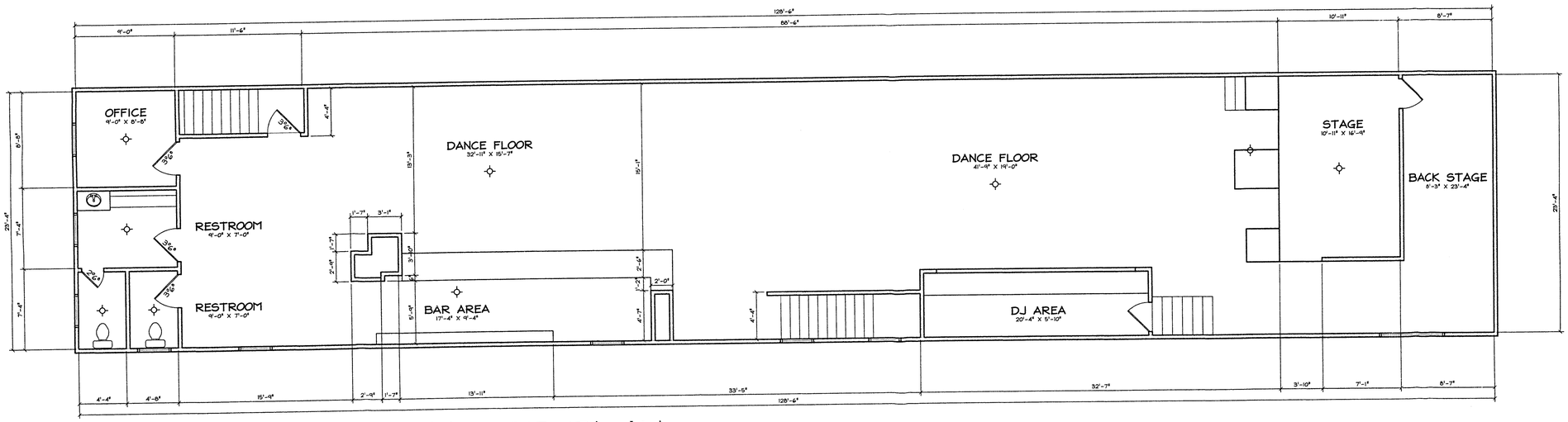

02 EXISTING SECOND FLOOR PLAN

REFERENCE: NONE SCALE: 3/16"=1'-0"

1. THE PROJECT WILL BE COMPLETED IN FOUR PHASES:

   PHASE 1 CLEAN AND DEBRIS REMOVAL
   PHASE 2 STABILIZING STRUCTURE OF BUILDING (PERMIT #1)
   PHASE 3 FLOOR 1 (PERMIT #2)
   PHASE 4 FLOOR 2 (PERMIT #3)

2. THE REMOVAL OF THE DAMAGED MATERIALS IS NEAR COMPLETION. THIS WORK HAS BEEN PERFORMED UNDER THE DEMOLITION PERMIT (PERMIT #1)

3. THE REMAINING SCOPE OF WORK INCLUDES REPLACING THE DAMAGED MATERIALS, EQUIPMENT, AND FURNISHING. THE USE/OCCUPANCY OF THE BUILDING WILL NOT BE CHANGED; THEREFORE, THIS IS A LEVEL 1 ALTERATION. (PERMIT #2 AND #3)

4. REWORK PLUMBING ON FIRST FLOOR RESTROOMMS TO IMPROVE ACCESSIBILITY.

5. THE ENGINEER'S STUCTURAL REPORT OUTLINES THE STRUCTUAL COMPONENTS OF THE PROJECT.

6. THE PLUMBING AND ELECTRICAL WORK WILL BE ON CONTRACTOR SPECIFIC PERMITS.

SCALE: 3/16"

REGISTERED ARCHITECT
MARY W. MOSS
8258
STATE OF TEXAS
10-23-15

SQUARE FOOTAGE	
1ST FLOOR HEATED	2,845.0#
2ND FLOOR HEATED	2,909.5#
TOTAL HEATED	5,754.0#
FOUNDATION	5,754.0#

ALL DRAWINGS, PLANS, AND SPECIFICATIONS ARE PROPERTY OF MM DESIGN. PURCHASER'S RIGHT IS CONDITIONAL AND LIMITED TO A ONE-TIME USE TO CONSTRUCT A SINGLE PROJECT ON THE LOT STATED HEREIN. THE USE OR REPRODUCTION OF THESE PLANS CONCERNING ANY OTHER CONSTRUCTION IS STRICTLY PROHIBITED WITHOUT WRITTEN PERMISSION OF MM DESIGN IN COLLEGE STA, TX. M-M DESIGN IS NOT AN ENGINEERING FIRM NOR AN ARCHITECTURAL FIRM. WE ARE NOT QUALIFIED NOR ARE WE LICENSED TO DESIGN STRUCTURAL FRAMING OR FOUNDATIONS. A LICENSED PROFESSIONAL ENGINEER SHOULD BE CONSULTED REGARDING STRUCTURAL FRAMING AND FOUNDATIONS. SHOULD AN ENGINEER'S SEAL BE PRESENT ON THE DRAWING, THEN THE "ENGINEER OF RECORD" SHALL BEAR THE SOLE RESPONSIBILITY FOR THE STRUCTURAL DESIGN. M-M DESIGN WILL NOT BE HELD RESPONSIBLE FOR THE STRUCTURAL DESIGN AND/OR ANY PROBLEMS THAT MAY ARISE REGARDING THE DESIGN.

M-M DESIGN
RESIDENTIAL-COMMERCIAL
BILL CHAMBERS 979.845.7511
FAX: (979) 845-6928
MARY MOSS 979.845.7511
COLLEGE STATION, TEXAS 77843
MOBILE: (979) 229-1483

SCHAEFER / ANDERSON BUILDING

FLOOR PLAN

DATE: 08/24/15
PROJECT: SH-15-194
DRAWN: SRM
CHECKED: SRM
HEATED: 5,754.0#
SLAB: 5,754.0#
REVISION: NONE

SHEET NUMBER

A-1.1

SHEET 01 OF 02

W:\Projects\Schaefer Custom Homes\SH15-194D Eden Downtown\Eden Downtown.dwg 10/29/2015 10:14:50 AM

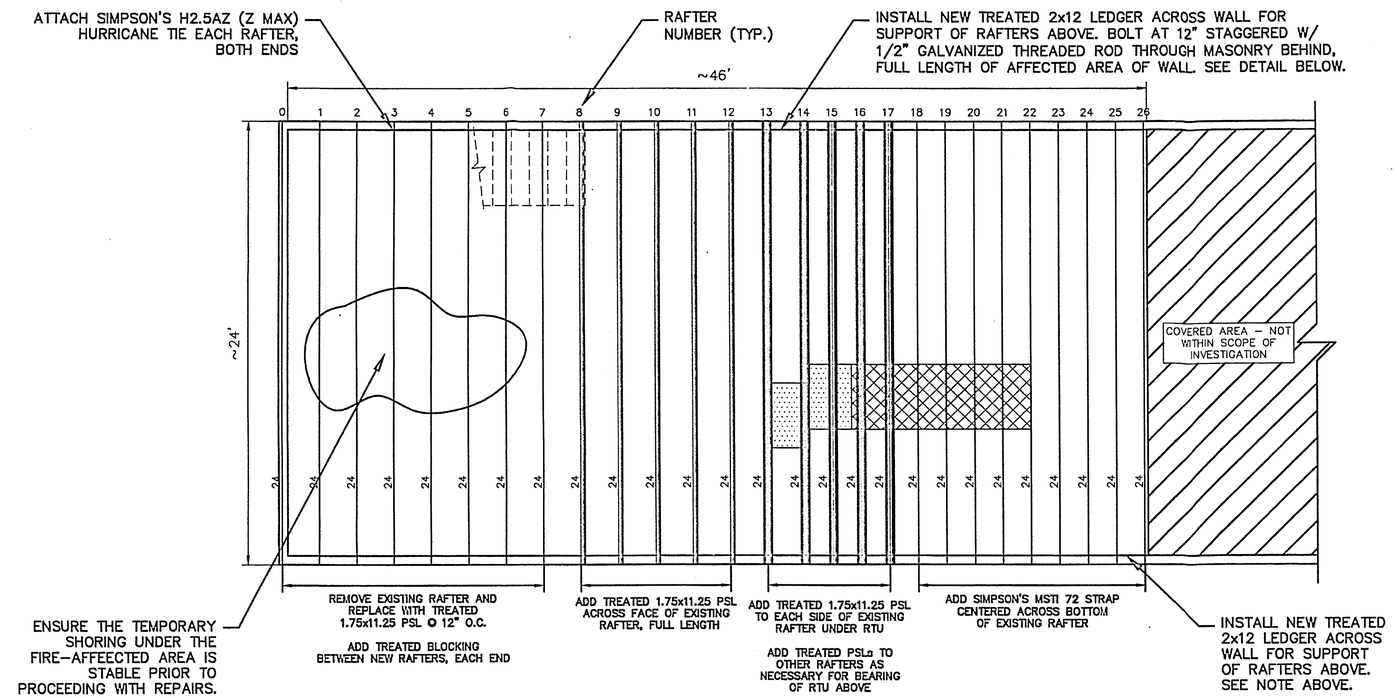

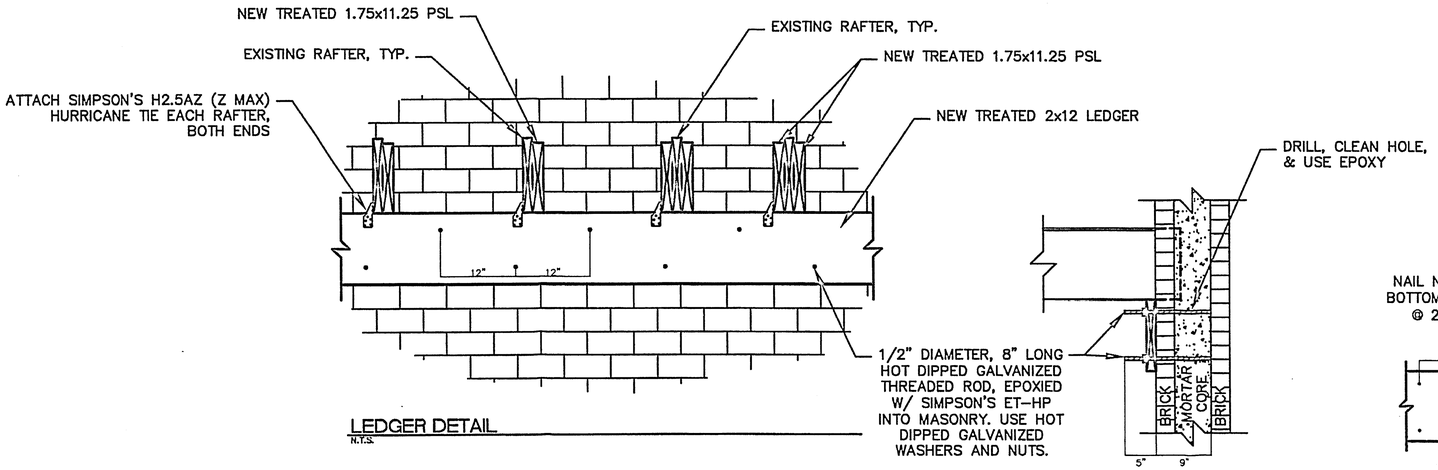

LEDGER DETAIL
N.T.S.

GENERAL

1. THESE PLANS ARE COPYRIGHT MLAW AS OF THE YEAR DATED.
2. ALL WORK, INCLUDING ITEMS NOT SPECIFICALLY ADDRESSED BY THE PLANS, TO BE DONE IN COMPLIANCE WITH THE LATEST BUILDING CODE ADOPTED BY THE LOCAL AUTHORITIVE MUNICIPALITY.
3. THESE DRAWINGS REPRESENT THE FINISHED STRUCTURE AND ARE NOT TO BE SCALED. THE DRAWINGS SHOW ONLY REPRESENTATIVE AND TYPICAL DETAILS AND DO NOT ILLUSTRATE EVERY CONDITION. THEY DO NOT CONVEY OR IMPLY THE MEANS AND METHODS TO IMPLEMENT THE DESIGN.
4. THE CONTRACTOR SHALL SUPERVISE AND DIRECT THE WORK, AND SHALL BE SOLELY RESPONSIBLE FOR ALL CONSTRUCTION MEANS, METHODS, TECHNIQUES, SEQUENCES, AND PROCEDURES; AND SHALL ENSURE CONFORMANCE WITH BEST PRACTICE.
5. THE CONTRACTOR SHALL FIELD VERIFY ALL DIMENSIONS, ELEVATIONS, AND EXISTING CONDITIONS (WHERE APPLICABLE) AT THE JOB SITE AS WELL AS THE PROVISIONS OF THE ENTIRE CONSTRUCTION DOCUMENTS AND BRING TO THE ARCHITECT'S OR ENGINEER'S ATTENTION ANY DISCREPANCY.
6. SHOULD CONDITIONS ARISE WHICH ARE NOT ADDRESSED BY THESE PLANS OR CONDITIONS BE DISCOVERED THAT ARE SUBSTANTIALLY DIFFERENT THAN THOSE THAT ARE ASSUMED IN THE PLANS, CONTACT THE ENGINEER AT ONCE FOR INSTRUCTION OR CLARIFICATION.
7. COORDINATE STRUCTURAL WORK WITH THE ARCHITECTURAL AND ALL OTHER PERTINENT DRAWINGS FOR DETAILS NOT SHOWN ON THE STRUCTURAL DRAWINGS.
8. IT SHALL BE THE CONTRACTOR'S RESPONSIBILITY TO DESIGN AND PROVIDE ADEQUATE SHORING, BRACING, FORM WORK, ETC., AS REQUIRED FOR PROTECTION OF LIFE AND PROPERTY, TO SUPPORT ANY CONSTRUCTION LOADS, AND TO MAINTAIN ALL BUILDING COMPONENTS SAFELY IN PLACE PRIOR TO THEIR FINAL ASSEMBLY AND ANCHORAGE INTO THE COMPLETED STRUCTURE.
9. THE CONTRACTOR SHALL MAKE PROVISIONS AT ALL TIMES TO INSURE THE PUBLIC IS NOT EXPOSED TO DANGEROUS CONDITIONS IN THE WORK AREA.
10. ALL INSPECTION AND TESTING SHALL BE PERFORMED ACCORDING TO BUILDING CODE AND THE REQUIREMENTS OF THESE CONTRACT DOCUMENTS, WHICHEVER IS MORE STRINGENT.
11. GRADE MARKS ON ALL LUMBER SHALL BE VISIBLE AT TIME OF INSPECTION.
12. DO NOT USE END JOINTED LUMBER FOR HORIZONTAL FRAMING MEMBERS.
13. ALL CONNECTIONS TO BE FASTENED PER FASTENING SCHEDULE AND FRAMING DETAILS, U.N.O.
14. ALL FRAMING CREATING CONCENTRATED LOADS TO BE INSTALLED EXACTLY IN THE LOCATIONS SHOWN ON PLAN TO PROVIDE A CONTINUOUS LOAD TRANSFER PATH TO CONCRETE.

FASTENER SCHEDULE

DESCR OF BUILDING ELEMENTS	NUMBER AND TYPE
CEILING AND ROOF FRAMING	
CEILING JOIST TO PLATE TOE NAIL	5-3x0.131
CEILING JOIST LAPS OVER WALLS FACE NAIL	4-3x0.131
CEILING JOIST TO PARALLEL RAFTER FACE NAIL	4-3x0.131
COLLAR TIE TO RAFTER, FACE NAIL	4-3x0.131
JACK RAFTER TO HIP, TOE NAIL	4-3x0.131
JACK RAFTER TO HIP, FACE NAIL	3-3x0.131
RAFTER TO TOP PLATE, TOE NAIL	3-3x0.131
RAFTER TO 2x RIDGE, FACE NAIL	3-3x0.131
RAFTER TO 2x RIDGE, TOE NAIL	3-3x0.131
BLOCKING BETWEEN RAFTER TO TOP PLATE, TOE NAIL	4-3x0.131
FLOOR FRAMING	
FLOOR JOIST TO BAND JOIST FACE NAIL	5-3x0.131
FLOOR JOIST TO SILL PLATE TOE NAIL	4-3x0.131
BLOCKING BETWEEN FLOOR JOIST TO SILL PLATE, TOE NAIL	4-3x0.131
BRIDGING TO FLOOR JOIST EACH END, TOE NAIL	3-3x0.120
RIM JOIST TO TOP PLATE, TOE NAIL	3x0.131 @ 6" O.C.
1x6 SUBFLOOR OR LESS TO EACH JOIST, FACE NAIL	2-3x0.131
2x SUBFLOOR TO EACH JOIST, BLIND AND FACE NAIL	3-3x0.131
BUILT UP GIRDERS AND BEAMS MAX 3 PLYS	3 ROWS 3x0.131 @ 12" O.C.

SHEATHING FASTENING REQUIREMENTS

ROOF SHEATHING	
5/16"-1"	8d COMMON (2-1/2"x0.131") ROOF 6" O.C. EDGE, 12" O.C. FIELD
WALL SHEATHING	
1/2" OR LESS	6d COMMON (2"x0.113") 6" O.C. EDGE, 12" O.C. FIELD
19/32"-5/8"	8d COMMON (2-1/2"x0.131") 6" O.C. EDGE, 12" O.C. FIELD
3/4"	8d COMMON (2-1/2"x0.131") 6" O.C. EDGE, 12" O.C. FIELD
FLOOR SHEATHING	
3/4"	8d COMMON (2-1/2"x0.131") 6" O.C. EDGE, 12" O.C. FIELD

1. THIS FASTENING SCHEDULE DERIVED FROM 2009 IRC TABLE R602.3(1) , REVISED JULY 2013
2. THIS FASTENING SCHEDULE APPLIES TO FRAMING MEMBERS HAVING AN ACTUAL THICKNESS OF 1-1/2" TO 1-3/4"
3. FASTENINGS ABOVE MAY ALSO BE USED FOR OTHER CONNECTIONS THAT ARE NOT LISTED BUT HAVE THE SAME CONFIGURATION AND THE SAME CODE REQUIREMENT FOR FASTENER QUANITY/SPACING AND FASTENER SIZE.

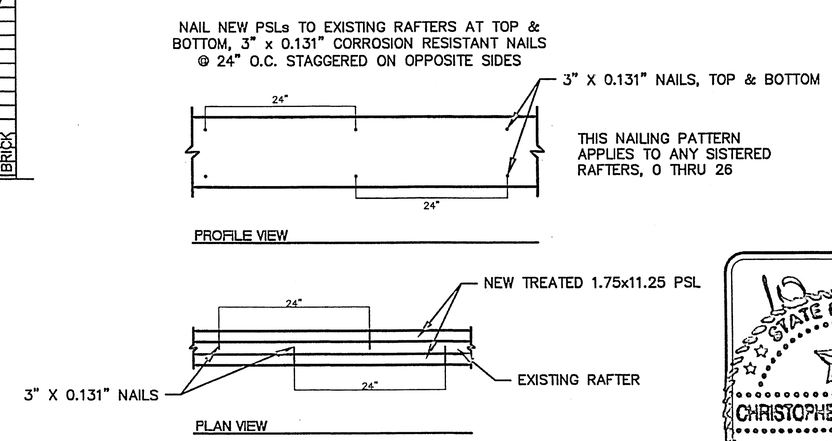

NEW RAFTER TO EXISTING RAFTER CONNECTION
N.T.S.

NOTES:
1. ENSURE "SOFT" AREAS OF FLOORING ARE REPLACED WITH SIMILAR MATERIALS.
2. SOME ADDITIONAL RAFTERS MAY NEED (2) FULL-LENGTH 1.75x11.25 PSLs ADDED TO BOTH SIDES, DEPENDING ON LOCATION OF ROOF TOP UNIT. DETERMINE AREA OF LOADING OF RTU FROM ABOVE.
3. USE CORROSION-RESISTANT FASTENERS IN ALL TREATED LUMBER.
4. ALL TREATED LUMBER TO BE KDAT 19 OR EQUIVALENT.
5. ALL WATER STAINED WOOD IN PROJECT AREA TO RECEIVE WOOD PRESERVATIVE W/ COPPER NAPHTHENATE AS ACTIVE INGREDIENT.
6. CONTACT MLAW FOR INSPECTION OF REPAIRS PRIOR TO CLOSING UP CEILING.

ROOF FRAMING REPAIR
1/8" = 1'-0"

MLAW
CONSULTANTS AND ENGINEERS
F-002585
2604 LONGHORN BLVD.
AUSTIN, TEXAS 78753
(512) 835-7000
GEOSTRUCTURAL/STRUCTURAL
GEOTECHNICAL/PAVEMENTS
FORENSIC

121 N. MAIN STREET
BRYAN, TEXAS
CLIENT: MICHAEL SCHAEFER

JOB No:1568000034.800
DATE: 09-02-15
DRAWN: CCB
CHECK:
REVISIONS:

1
SHEET
1OF 1

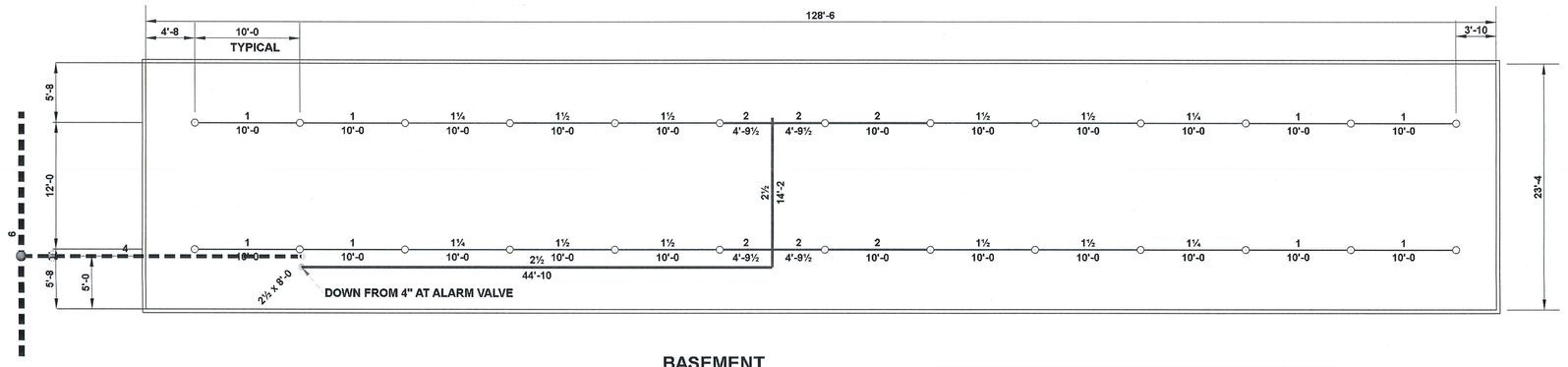

BASEMENT

Hydraulic Information	
Remote Area TWO	
OCCUPANCY CLASSIFICATION	Light Hazard
DENSITY	0.100gpm/ft² for 1500.00ft² (Actual 1572.18ft²)
TOTAL HOSE STREAMS	100.00
DRY CAPACITY	0.00gal
TOTAL HEADS FLOWING	10
K-FACTOR	5.6
TOTAL WATER REQUIRED	356.30
TOTAL PRESSURE REQUIRED	48.299
BASE of RISER (gpm)	356.30
BASE of RISER (psi)	48.299
SAFETY MARGIN (psi)	+11.603 (19.4%)

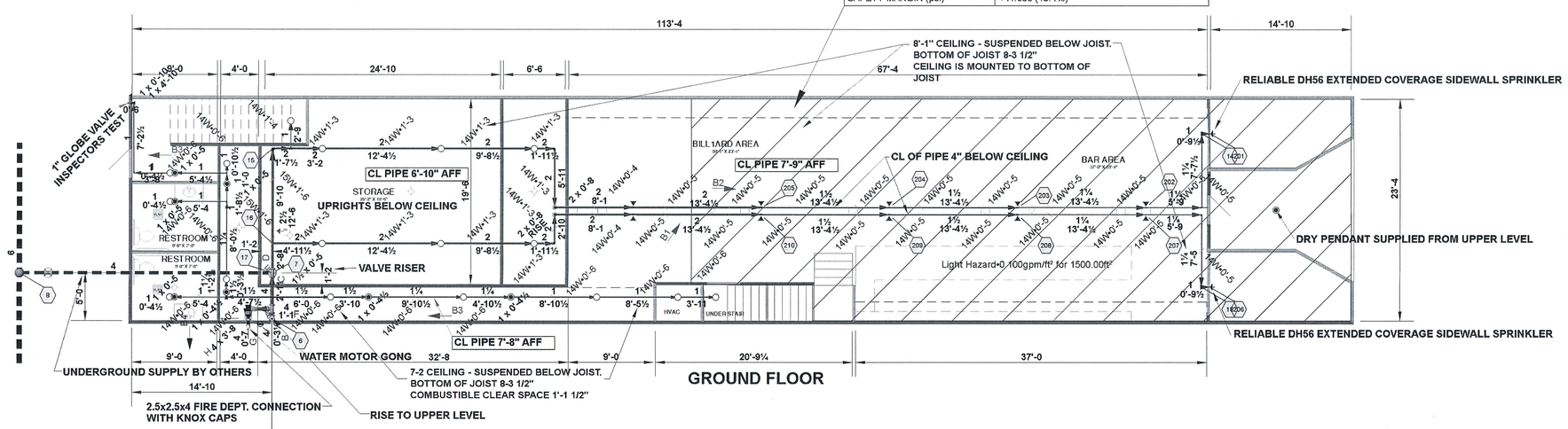

GROUND FLOOR

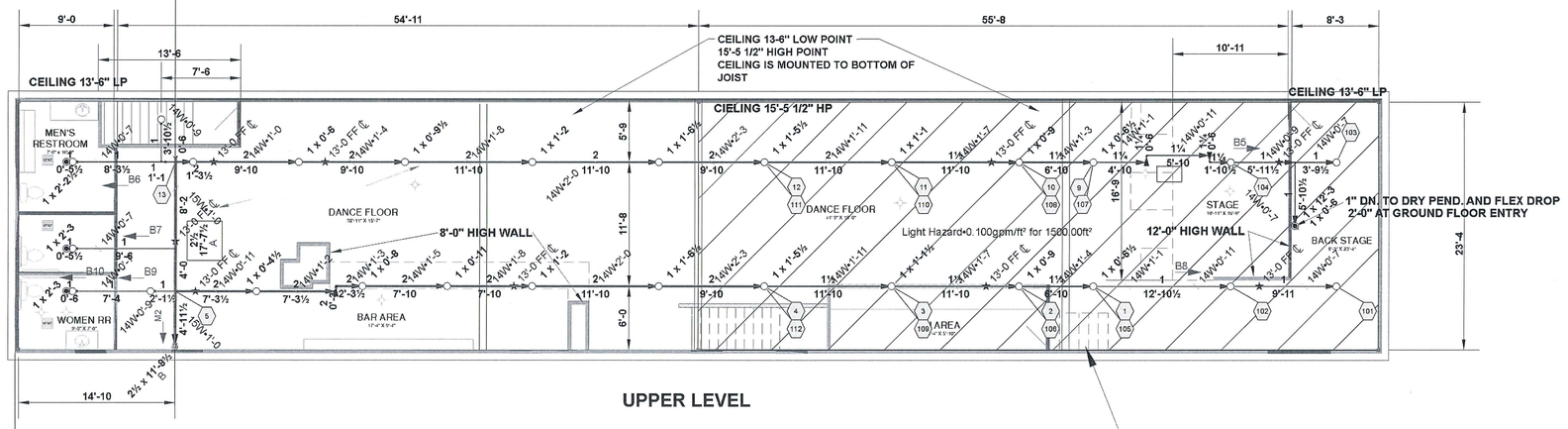

UPPER LEVEL

Hydraulic Information	
Remote Area ONE	
OCCUPANCY CLASSIFICATION	Light Hazard
DENSITY	0.100gpm/ft² for 1500.00ft² (Actual 1499.17ft²)
TOTAL HOSE STREAMS	100.00
DRY CAPACITY	0.00gal
TOTAL HEADS FLOWING	12
K-FACTOR	5.6
TOTAL WATER REQUIRED	328.60
TOTAL PRESSURE REQUIRED	43.691
BASE of RISER (gpm)	328.60
BASE of RISER (psi)	43.691
SAFETY MARGIN (psi)	+16.224 (27.1%)

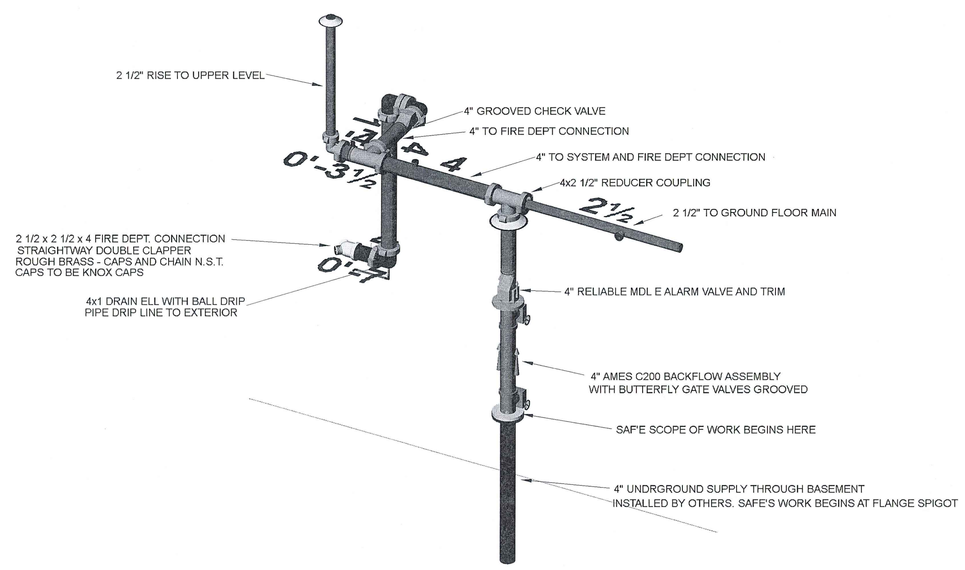

RISER DETAIL
SCALE: 1/2" = 1'-0"

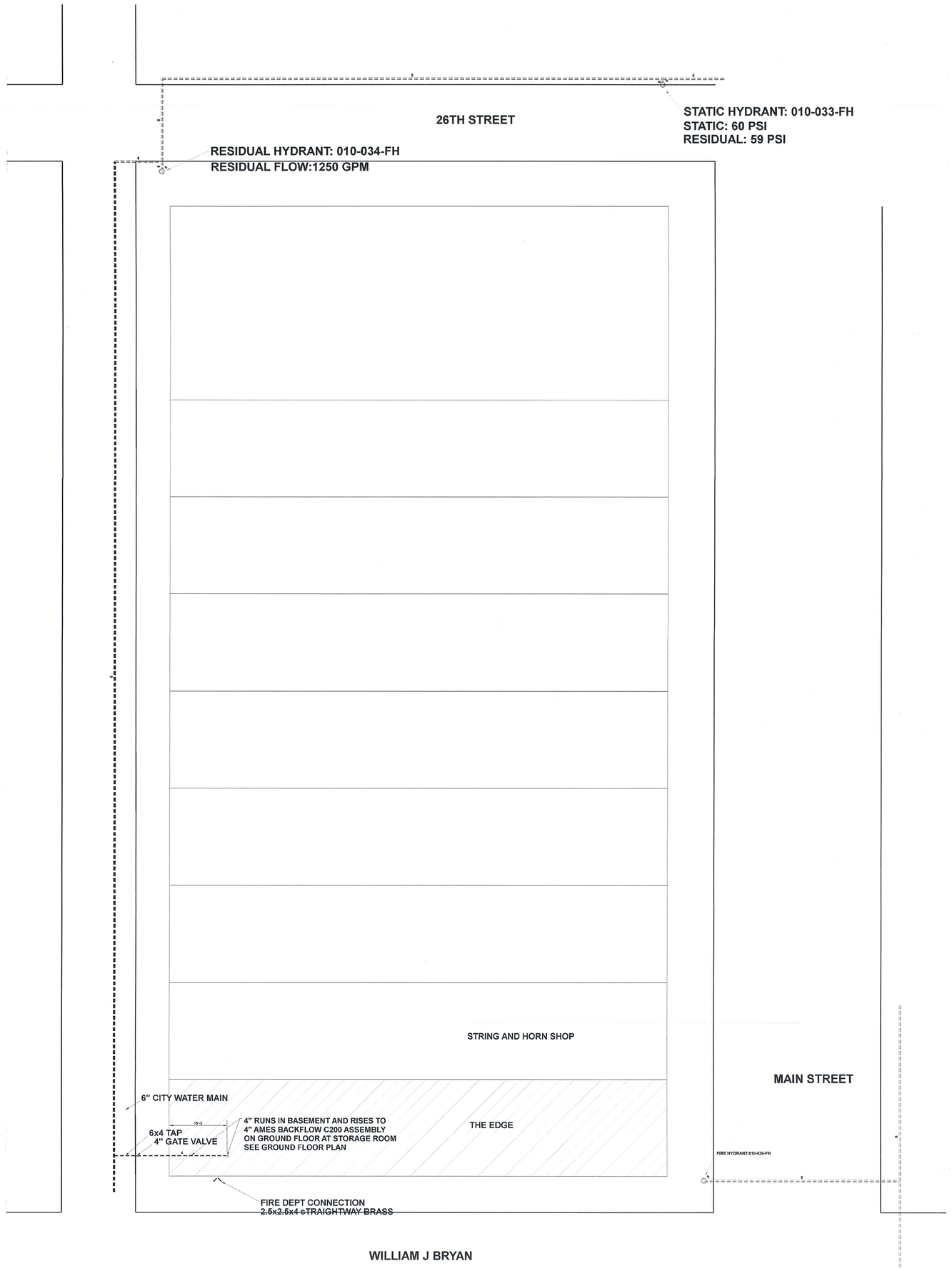

SITE PLAN
SCALE: 1/16" = 1'-0"

GENERAL NOTES

ALL PIPE 1" THRU 2" TO BE SCH 40 BLK STL PIPE WITH THREADED ENDS AND BLK C. I. FITTINGS
ALL PIPE 2 1/2" THRU 4" TO BE BLK SHD 10 STL PIPE WITH GROOVED ENDS AND GROOVED FITTINGS AND COUPLINGS.
INSTALL ALL PIPE PER NFPA #13

HANG ALL BRANCHLINE PIPE TO WOOD STRUCTURE WITH SAMMY SCREWS TO BOTTOM OF WOOD JOIST.
HANG ALL MAINS TO SIDE OF WOOD JOIST WITH SAMMY SIDEWINDER.
HANG ALL PIPE PER NFPA #13.

DESIGN: LIGHT HAZARD PER NFPA #13
.10 GPM PER SQ. FT. OVER 1500 SQ. FT.
SEE HYDRAULIC TABLES FOR SPRINKLER DESIGN DEMANDS.

CITY OF BRYAN TEXAS WATER FLOW TEST:
STATIC:60 PSI
RESIDUAL:59 PSI
FLOW:1250 GPM
DATE:5/9/2016, 8:20 AM, CITY OF BRYAN WATER DEPT.

I HAVE REVIEWED THESE PLANS AND CERTIFY THAT THEY COMPLY WITH THE ADOPTED NFPA STANDARDS
STANDARD AUTOMATIC FIRE ENT.
500 GRAHAM RD.
COLLEGE STATION, TEXAS 77845
PHONE:979-690-0301 FAX:979-690-6741
TEXAS LICENSE NUMBER: SCR-0-1734091
R.M.E. SIGNATURE:
PRINTED R.M.E. NAME: LAURENCE RAUSCHER
R.M.E. NUMBER: R.M.E.-0598 DATE 6/27/16
☐ AS-BUILT ☐ SUBMITTAL ☒ OTHER
N.I.C.E.T. LEVEL IV CERTIFIED # 068998

IFC - 05/11/2016

N

AMERICAN FIRE PROTECTION GROUP, INC.
www.afpgusa.com

Standard Automatic Fire Enterprises
500 GRAHAM ROAD, COLLEGE STATION TEXAS 77845
Fire Alarm Licenses: TX-0-1734091
Phone (979) 690-0301 Fax (979) 690-6741
AMERICAN FIRE PROTECTION GROUP, INC

I HAVE REVIEWED THESE PLANS AND CERTIFY THAT THEY COMPLY WITH THE ADOPTED NFPA STANDARDS
Standard Automatic Fire Enterprises
500 Graham Rd.
College Station, Texas 77845
Phone (979) 690-0301
Fax (979) 690-6741
Texas State License SCR-0-1734091

RME SIGNATURE:
PRINTED RME NAME: Laurence Rauscher
RME #: 0598 DATE:
☐ AS-BUILT ☐ SUBMITTAL ☐ OTHER

Sprinkler Legend

Symbol	SIN	Qty	K-Factor	Type	Size	Response	Finish	Temp	Note
▼	RA1405	10	5.6	Sidewall	½	Quick	Brass	155°F	
●	RA1414	11	5.6	Pendent	½	Quick	Chrome	155°F	
○	RA1425	70	5.6	Upright	½	Quick	Brass	155°F	
◐	RA1564	2	5.6	Sidewall	½	Quick	Brass	155°F	
◉	RA5714	1	5.6	Pendent	½	Quick	Chrome	155°F	
		Total = 94							

REVISIONS:
1 05/09/2016 GENERAL REVISION
2
3

JOB NAME: THE EDGE 121 N. MAIN BRYAN, TEXAS

SHEET NAME: FIRE SPRINKLER PLAN

DRAWN BY: LAURI RAUSCHER
DATE: 05/06/2016
JOB #: 27160010
SCALE (UNO): 1/8" = 1'-0"
SHEET NO: FP1.10