UPRR Folder No.: 2724-93

UPRR Audit No.: _____

SIGNAL IMPROVEMENT AGREEMENT

THIS AGREEMENT, made this _____ day of _____, 20____, by and between **UNION PACIFIC RAILROAD COMPANY**, a Delaware corporation, to be addressed at 1400 Douglas Street, MS1690, Omaha, Nebraska 68179-1690 (hereinafter "Railroad"), and the **CITY OF BRYAN**, a municipal corporation of the State of Texas to be addressed at PO Box 1000, Bryan, Texas 77805 (hereinafter "City"),

WITNESSETH:

WHEREAS, City desires to undertake as its project the improvements of the existing signal facilities and the installation of highway traffic control signals at the intersection of F&B Road and Wellborn Road in Bryan, Brazos County, Texas, as shown on the Railroad Location Print, marked **Exhibit A**, hereto attached and hereby made a part hereof; and

WHEREAS, Railroad has grade crossing protection devices at the intersection of its track and F&B Road at Railroad Mile Post 74.35, on the Navasota Subdivision, needing improvements; and

WHEREAS, Railroad agrees to install the necessary relays and other materials required to interconnect and coordinate the operation of said railroad grade crossing protection devices with the operation of said highway traffic control signals. Said work is to be performed at the sole expense of City; and

WHEREAS, City and Railroad, severally and collectively, desire to interconnect and coordinate the operation of said signals.

AGREEMENT:

NOW, THEREFORE, in consideration of the premises and of the mutual covenants and agreements of the parties hereto to be by them respectively kept and performed as hereunder set forth, it is agreed as follows:

ARTICLE 1 – LIST OF EXHIBITS

Exhibit A	Railroad Location Print
Exhibit B	Railroad Material and Force Account Work Estimate
Exhibit C	Form of Contractor's Right of Entry Agreement

ARTICLE 2 - SCOPE OF WORK

a). City and Railroad, severally and collectively, agree to interconnect and coordinate the operation of the railroad grade crossing protection devices with the operation of the highway traffic control signals at Mile Post 74.35, Navasota Subdivision.

b). The Railroad, at City's expense, shall furnish all labor, material, equipment and supervision for the signal improvements:

- Install the necessary relays and other signal materials required for interconnect with 31 seconds advance preemption time;
- Install new CWT circuitry and cabin with crossing gates;
- Engineering, and
- Flagging.

c). Railroad hereby grants permission and authority to City and/or its contractor to install the conduit with the necessary wiring on Railroad right of way on the condition that City requires any of its contractors performing work on Railroad's property to enter into a Right of Entry Agreement with Railroad. City acknowledges receipt of a copy of the Right of Entry Agreement and understanding of its terms, provisions, and requirements, and will inform its contractor of the need to execute the agreement. Under no circumstances will City's contractor be allowed onto Railroad's premises without first executing the Right of Entry Agreement.

d). The City agrees to reimburse the Railroad for one hundred percent (100%) of Railroad's actual labor and material costs associated with the work and materials described herein. The Railroad estimates such cost to be (**$223,557.00**), as set for in Railroad's Material and Force Account Estimate dated February 23, 2012, marked **Exhibit B**, hereto attached and hereby made a part hereof. Within one hundred twenty (120) days after Railroad has completed its work, the Railroad will submit a final billing to City for any balance owed. City shall pay the Railroad within Thirty (30) days of its receipt of all bills submitted by the Railroad.

ARTICLE 3 - CONSTRUCTION AND MAINTENANCE

a) The City, at it's expense, shall furnish all labor, material, equipment and supervision for the installation and maintenance of highway traffic control signals at the intersection of F& B Road and Wellborn Road.

b) The City shall, at its own sole expense, maintain, repair, and renew, or cause to be maintained, repaired and renewed, the entire Crossing Area and Roadway, except the portions between the track tie ends, which shall be maintained by and at the expense of the Railroad.

ARTICLE 4 - PAYMENT

In addition to the payment set forth in Article 1D above, in consideration of City's agreement to perform and abide by the terms of this Agreement and the work to be performed by Railroad, City agrees to pay Railroad an administrative fee of **ONE THOUSAND DOLLARS ($1,000.00)** upon the execution of this Agreement.

ARTICLE 5 - CONDITIONS

a). Except as set forth in Article 5, City shall not be liable to Railroad on account of any failure of Railroad's flasher lights to operate properly nor shall Railroad have or be entitled to maintain any action against City arising from any failure from Railroad's flasher lights to operate properly. Similarly, Railroad shall not be liable to City on account of any failure of City's traffic signal to operate properly nor shall City have or be entitled to maintain any action against Railroad arising from any failure of City's traffic signal to operate properly.

b). City reserves the right to cancel this agreement for any reason and at any time prior to Railroad proceeding with any part of the work outlined herein.

c). Fiber optic cable systems may be buried on Railroad's property. Protection of the fiber optic cable systems is of extreme importance since any break could disrupt service to users resulting in business interruption and loss of revenue and profits. City or its contractor(s) shall telephone the Railroad during normal business hours (7:00 a.m. to 9:00 p.m., Central Time, Monday through Friday, except holidays) at 1-800-336-9193 (also a 24-hour number, 7 day number for emergency calls) to determine if fiber optic cable is buried anywhere on Railroad's premises to be used by City or its contractor(s). If it is, City or its contractor(s) will telephone the telecommunication company(ies) involved, arrange for a cable locator, and make arrangements for relocation or other protection of the fiber optic cable prior to beginning any work on Railroad's premises.

ARTICLE 6 - INTERFERENCE

Each party shall take all suitable precautions to prevent any interference (by induction, leakage of electricity or otherwise) with the operation of the other party's signals or communications lines, or those of its tenants; and if, at any time, the operation or maintenance of its signals results in any electrostatic effects, the party whose signals are causing the interference shall, at its expense, immediately take such action as may be necessary to eliminate such interference.

ARTICLE 7 - CONTRACTOR'S RIGHT OF ENTRY AGREEMENT - INSURANCE

a). If the City will be hiring a contractor or contractors to perform any work involving the Project (including initial construction and any subsequent relocation or maintenance and repair work), the City shall require its contractor(s) to (i) execute the Railroad's then current Contractor's Right of Entry Agreement; (ii) obtain the insurance coverage described in Exhibit C of the current Contractor's Right of Entry Agreement; and (iii) provide the insurance policies, certificates, binders and/or endorsements to Railroad that are required in Exhibit C of the current Contractor's Right of Entry Agreement before allowing any of its contractor(s) and their respective subcontractors to commence any work in the Crossing Area or on any other Railroad property.

b). The City acknowledges receipt of a copy of Railroad's current Contractor's Right of Entry Agreement, attached hereto as **Exhibit C** and hereby made a part hereof, and confirms that it will inform its contractor(s) that it/they and their subcontractors are required to execute such form of agreement before commencing any work on any Railroad property. Under no circumstances will City's contractor(s) or any subcontractors be allowed on to Railroad's property without first executing the Railroad's Contractor's Right of Entry Agreement and obtaining the insurance set forth therein and also providing to Railroad the insurance policies, binders, certificates and/or endorsements described therein.

c). All insurance correspondence, binders, policies, certificates and/or endorsements shall be sent to:

Senior Manager Contracts
Union Pacific Railroad Company
1400 Douglas Street, MS1690
Omaha, NE 68179-1690
UPRR Folder No. 2724-93

d). If the City's own employees will be performing any of the Project work, the City may self-insure

all or a portion of the insurance coverage subject to Railroad's prior review and approval.

IN WITNESS WHEREOF, the parties hereto have caused this Agreement to be executed in duplicate on the day and year first herein written.

UNION PACIFIC RAILROAD COMPANY
(Federal Tax ID #94-6001323)

By_____
PAUL G. FARRELL
Senior Manager Contracts

ATTEST:

CITY OF BRYAN

_____

By_____

Printed Name:_____

Title:_____

EXHIBIT A

To Signal Improvement Agreement

Cover Sheet for the
Railroad's Location Print

RAILROAD LOCATION PRINT
OF AN EXISTING AT-GRADE PUBLIC ROAD CROSSING
SIGNAL UPGRADE & SIGNAL PREEMPTION CONSTRUCTION PROJECT

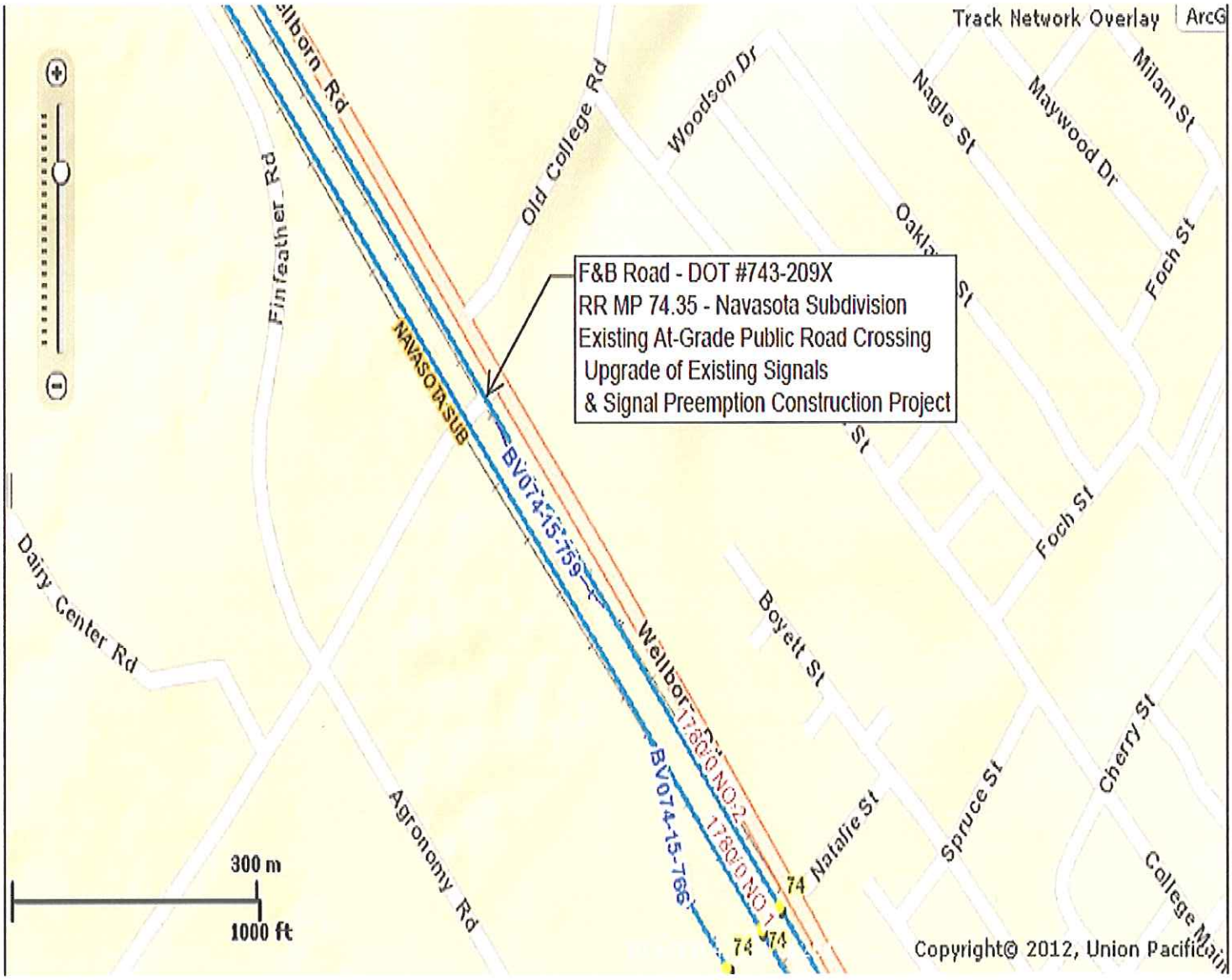

RAILROAD WORK TO BE PERFORMED:

1. Install CWT Circuitry and Cabin and Relocated crossing gates.
2. Engineering & Flagging.

EXHIBIT "A"

UNION PACIFIC RAILROAD COMPANY

NAVASOTA SUBDIVISION
RAILROAD MILE POST 74.35
GPS: N 30° 37.4640', W 96° 21.4024'
BRYAN, BRAZOS CO., TX.

To accompany an agreement with the
CITYOF BRYAN
covering an existing at-grade public road crossing signal upgrade and signal preemption construction project.

Folder No. 2724-93 Date: March 6, 2012

WARNING

IN ALL OCCASIONS, U.P. COMMUNICATIONS DEPARTMENT MUST BE CONTACTED IN ADVANCE OF ANY WORK TO DETERMINE EXISTENCE AND LOCATION OF FIBER OPTIC CABLE.
PHONE: 1-(800) 336-9193

EXHIBIT B

To Signal Improvement Agreement

Cover Sheet for the
Railroad's Material Force & Account Estimate

DATE: 2012-02-23

ESTIMATE OF MATERIAL AND FORCE ACCOUNT WORK
BY THE
UNION PACIFIC RAILROAD

THIS ESTIMATE GOOD FOR 6 MONTHS EXPIRATION DATE IS :2012-08-23

DESCRIPTION OF WORK:
INSTALL CWT CIRCUITRY AND CABIN WITH CROSSING
GATES RELOCATED FROM RETIRED CROSSING FM 2818
AT BRYAN, TX. F+B ROAD M.P. 74.35 ON THE
NAVASOTA SUBDIVISION DOT #743209X
WORK TO BE PERFORMED BY RAILROAD WITH EXPENSE AS BELOW:

PID: 72778 AWO: 08198 MP,SUBDIV: 74.35, NAVASOTA
SERVICE UNIT: 09 CITY: BRYAN STATE: TX

DESCRIPTION	QTY	UNIT	LABOR	MATERIAL	RECOLL	UPRR	TOTAL
ENGINEERING WORK							
ENGINEERING			5210		5210		5210
LABOR ADDITIVE 167.76%			16751		16751		16751
SIG-HWY XNG			4821		4821		4821
TOTAL ENGINEERING			26782		26782		26782
SIGNAL WORK							
BILL PREP			900		900		900
CONTRACT				2390	2390		2390
LABOR ADDITIVE 167.76%			74965		74965		74965
MATL STORE EXPENSE				30	30		30
METER SERVICE				7500	7500		7500
PERSONAL EXPENSES				24150	24150		24150
ROCK/GRAVEL/FILL				7500	7500		7500
SIGNAL			43786	23907	67693		67693
TRANSP/IB/OB/RCLW CONTR				6213	6213		6213
WZT CONTROL				5433	5433		5433
TOTAL SIGNAL			119651	77123	196774		196774
TRACK & SURFACE WORK							
ENVIRONMENTAL - PERMITS				1	1		1
TOTAL TRACK & SURFACE				1	1		1
LABOR/MATERIAL EXPENSE			146433	77124			
RECOLLECTIBLE/UPRR EXPENSE					223557	0	
ESTIMATED PROJECT COST							223557
EXISTING REUSEABLE MATERIAL CREDIT					0		
SALVAGE NONUSEABLE MATERIAL CREDIT					0		
RECOLLECTIBLE LESS CREDITS							

THE ABOVE FIGURES ARE ESTIMATES ONLY AND SUBJECT TO FLUCTUATION. IN THE EVENT OF AN INCREASE OR DECREASE IN THE COST OR QUANTITY OF MATERIAL OR LABOR REQUIRED, UPRR WILL BILL FOR ACTUAL CONSTRUCTION COSTS AT THE CURRENT EFFECTIVE RATE.

EXHIBIT B

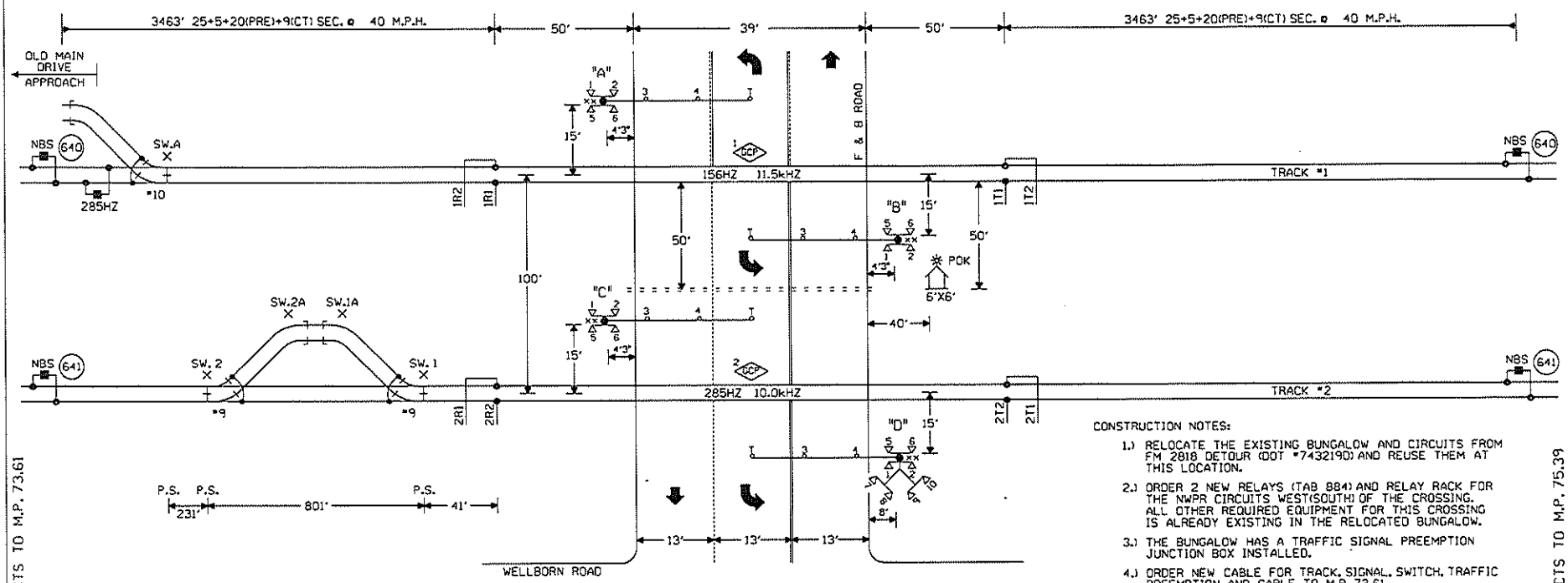

CONSTRUCTION NOTES:

1.) RELOCATE THE EXISTING BUNGALOW AND CIRCUITS FROM FM 2818 DETOUR (DOT #743219D) AND REUSE THEM AT THIS LOCATION.

2.) ORDER 2 NEW RELAYS (TAB 884) AND RELAY RACK FOR THE NWPR CIRCUITS WEST(SOUTH) OF THE CROSSING. ALL OTHER REQUIRED EQUIPMENT FOR THIS CROSSING IS ALREADY EXISTING IN THE RELOCATED BUNGALOW.

3.) THE BUNGALOW HAS A TRAFFIC SIGNAL PREEMPTION JUNCTION BOX INSTALLED.

4.) ORDER NEW CABLE FOR TRACK, SIGNAL, SWITCH, TRAFFIC PREEMPTION AND CABLE TO M.P. 73.61.

5.) THE GATES HAVE BEEN RELOCATED FROM FM 2818 DETOUR AND HAVE BEEN INSTALLED.

6.) ORDER 2 SETS OF SIDELIGHTS FOR GATE "D".

7.) INSTALL TRACK FILTERS (TAB 729) TO THE ELECTROCODE UNITS @ THE FOLLOWING LOCATIONS:
(1) 156 HZ - M.P. 73.61
(1) 156 HZ - M.P. 75.39

NOTES:

⊗ = TWISTED WIRES
INSULATED 1 TWIST PER FT.
ALL TRACK WIRES 2C. #6

TRANSMITTER AND RECEIVER LEADS TO BE SEPARATED BY AT LEAST 12" IN TRENCH. LENGTHS SHOULD NOT EXCEED MANUFACTURES RECOMMENDATION.

TOP OF FOUNDATION TO BE AT SAME ELEVATION AS THE SURFACE OF THE TRAVELED WAY & NO MORE THAN 4" ABOVE THE SURFACE OF THE GROUND.

ALL BUNGALOW WIRING TO BE #16 AWG FLEX UNLESS OTHERWISE SPECIFIED EXCEPT ALL GROUND WIRE TO BE #6 AWG FLEX OR LARGER.

ALL WIRING IN GATE MECHANISM TO BE #10 "AWG FLEX".

REFER TO UP STANDARD DWG FOR BUNGALOW GROUNDING.

PORTABLE GENERATOR EXTENSION CORD FOR 240V TO 240V IS PROVIDED AS WELL AS A 120V TO 240V ADAPTER.

ALL LIGHTS TO BE 12" ROUNDELS.

= = = = = = 4" X 60' CONDUIT

LIGHTS: LED LIGHTS

GATE A: 23'
GATE B: 23'
GATE C: 23'
GATE D: 23'

xx = BELL

W(S) ←—○—→ E(N)

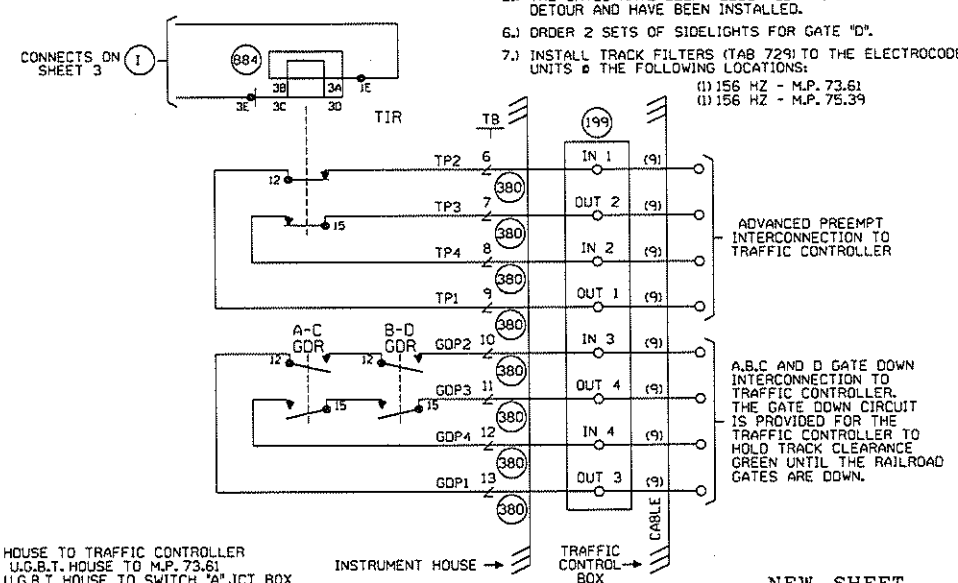

CABLE TABULATION

CABLE NO. 9 U.G.B.T. HOUSE TO TRAFFIC CONTROLLER
CABLE NO. 10 7C #14 U.G.B.T. HOUSE TO M.P. 73.61
CABLE NO. 11 7C #14 U.G.B.T. HOUSE TO SWITCH "A" JCT BOX
CABLE NO. 12 7C #14 U.G.B.T. HOUSE TO SWITCH "1" JCT BOX

NEW SHEET

Designed: 07/19/11	MODIFICATION LEVEL		UNION PACIFIC	Date: 07/19/11	UNION PACIFIC RAILROAD	Sht 1
UPGRADE F & B ROAD, M.P. 74.35, WITH GATES, GCP 4000 AND ADVANCED PREEMPTION	O. A. LAST LEVEL CHECKED	DU	QUALITY PERFORMANCE SAFETY	Dwn: WIT	BRYAN, TEXAS	DOT 743209X
	LAST LEVEL MOD THIS TYPICAL	DU		Chk: JPW	F & B ROAD	MP: 74.35
Rec'd: WO#: 08198	LAST LEVEL BY DESIGNER	DU	SIGNAL DESIGN	AFE: 08198	NAVASOTA SUBDIVISION	ID: 18057435.1X
Tk: /WIT/JTB	CHANGED FROM TYPICAL 7	Y			Office of Sr. AVP Engineering - Signal/TCO Omaha, Nebraska	

EXHIBIT B

EXHIBIT C

To Signal Improvement Agreement

Cover Sheet for the Form of
Contractor's Right of Entry Agreement

UPRR Folder No. Folder Number

UPRR Audit No. _____

CONTRACTOR'S
RIGHT OF ENTRY AGREEMENT

(TEXAS CITIES/COUNTIES)

THIS AGREEMENT is made and entered into as of the _____ day of _____, 20____, by and between **UNION PACIFIC RAILROAD COMPANY**, a Delaware corporation ("Railroad"); and

_____,
(NAME OF CONTRACTOR)

a _____ corporation ("Contractor").
(Corporate Status)

RECITALS:

Contractor has been hired by *Name of Public Agency* ("City or County") to perform work relating to purpose (the "Work"), with all or a portion of such work to be performed on property of Railroad in the vicinity of Railroad's Mile Post Mile Post on Railroad's Name of Subdivision in or near City, County, Texas, as such location is in the general location shown on the Railroad Location Print marked **Exhibit A**, and as specified on the Detailed Print(s) collectively marked **Exhibit A-1**, each attached hereto and hereby made a part hereof. The Work is the subject of a contract dated _____ between the Railroad and the City or County.
(Date of Contract)

Railroad is willing to permit Contractor to perform the work described above at the location described above subject to the terms and conditions contained in this Agreement

AGREEMENT:

NOW, THEREFORE, it is mutually agreed by and between Railroad and Contractor, as follows:

ARTICLE 1 - DEFINITION OF CONTRACTOR.

For purposes of this Agreement, all references in this agreement to Contractor shall include Contractor's contractors, subcontractors, officers, agents and employees, and others acting under its or their authority.

ARTICLE 2 - RIGHT GRANTED; PURPOSE.

Railroad hereby grants to Contractor the right, during the term hereinafter stated and upon and subject to each and all of the terms, provisions and conditions herein contained, to enter upon and have ingress to and egress from the property described in the Recitals for the purpose of performing any work described in the Recitals above. The right herein granted to Contractor is

SAMPLE

limited to those portions of Railroad's property specifically described herein, or as designated by the Railroad Representative named in Article 4.

ARTICLE 3 - TERMS AND CONDITIONS CONTAINED IN EXHIBITS B, C AND D.

The Terms and Conditions contained in **Exhibit B**, the Insurance Requirements contained in **Exhibit C** and the Minimum Safety Requirements contained in **Exhibit D**, each attached hereto, are hereby made a part of this Agreement.

ARTICLE 4 - ALL EXPENSES TO BE BORNE BY CONTRACTOR; RAILROAD REPRESENTATIVE.

A. Contractor shall bear any and all costs and expenses associated with any work performed by Contractor, or any costs or expenses incurred by Railroad relating to this Agreement.

B. Contractor shall coordinate all of its work with the following Railroad representative or his or her duly authorized representative (the "Railroad Representative"):

Name & Address of MTM *Name & Address of MSM*

C. Contractor, at its own expense, shall adequately police and supervise all work to be performed by Contractor and shall ensure that such work is performed in a safe manner as set forth in Section 7 of **Exhibit B**. The responsibility of Contractor for safe conduct and adequate policing and supervision of Contractor's work shall not be lessened or otherwise affected by Railroad's approval of plans and specifications involving the work, or by Railroad's collaboration in performance of any work, or by the presence at the work site of a Railroad Representative, or by compliance by Contractor with any requests or recommendations made by Railroad Representative.

ARTICLE 5 - TERM; TERMINATION.

A. The grant of right herein made to Contractor shall commence on the date of this Agreement, and continue until _____, unless sooner terminated as herein provided, or
(Expiration Date)
at such time as Contractor has completed its work on Railroad's property, whichever is earlier. Contractor agrees to notify the Railroad Representative in writing when it has completed its work on Railroad's property.

B. This Agreement may be terminated by either party on ten (10) days written notice to the other party.

ARTICLE 6 - CERTIFICATE OF INSURANCE.

A. Before commencing any work, Contractor will provide Railroad with (i) the insurance binders, policies, certificates and endorsements set forth in **Exhibit C** of this Agreement, and (ii) the insurance endorsements obtained by each subcontractor as required under Section 12 of **Exhibit B** of this Agreement.

B. All insurance correspondence, binders, policies, certificates and/or endorsements shall be sent to:

Union Pacific Railroad Company

1400 Douglas Street, MS 1690
Omaha, NE 68179-1690
Attn: Senior Manager Contracts
UPRR Folder No. Folder Number

ARTICLE 7 - DISMISSAL OF CONTRACTOR'S EMPLOYEE.

At the request of Railroad, Contractor shall remove from Railroad's property any employee of Contractor who fails to conform to the instructions of the Railroad Representative in connection with the work on Railroad's property, and any right of Contractor shall be suspended until such removal has occurred. Contractor shall indemnify Railroad against any claims arising from the removal of any such employee from Railroad's property.

ARTICLE 8 - CROSSINGS.

No additional vehicular crossings (including temporary haul roads) or pedestrian crossings over Railroad's trackage shall be installed or used by Contractor without the prior written permission of Railroad.

ARTICLE 9 - EXPLOSIVES.

Explosives or other highly flammable substances shall not be stored on Railroad's property without the prior written approval of Railroad.

IN WITNESS WHEREOF, the parties hereto have duly executed this agreement in duplicate as of the date first herein written.

UNION PACIFIC RAILROAD COMPANY
(Federal Tax ID No. 94-6001323)

By_____
PAUL G. FARRELL
Senior Manager Contracts

_____
(NAME OF CONTRACTOR)

By_____

Printed Name: _____

Title: _____

SAMPLE

EXHIBIT A

TO CONTACTOR'S RIGHT OF ENTRY AGREEMENT

RAILROAD LOCATION PRINT

Exhibit A will be a print showing the general location of the right of entry area.

EXHIBIT B

TO CONTRACTOR'S RIGHT OF ENTRY AGREEMENT

TERMS AND CONDITIONS

Section 1. NOTICE OF COMMENCEMENT OF WORK - FLAGGING.

A. Contractor agrees to notify the Railroad Representative at least thirty (30) working days in advance of Contractor commencing its work and at least ten (10) working days in advance of proposed performance of any work by Contractor in which any person or equipment will be within twenty-five (25) feet of any track, or will be near enough to any track that any equipment extension (such as, but not limited to, a crane boom) will reach to within twenty-five (25) feet of any track. No work of any kind shall be performed, and no person, equipment, machinery, tool(s), material(s), vehicle(s), or thing(s) shall be located, operated, placed, or stored within twenty-five (25) feet of any of Railroad's track(s) at any time, for any reason, unless and until a Railroad flagman is provided to watch for trains. Upon receipt of such thirty (30)-day notice, the Railroad Representative will determine and inform Contractor whether a flagman need be present and whether Contractor needs to implement any special protective or safety measures. If flagging or other special protective or safety measures are performed by Railroad, Railroad will bill Contractor for such expenses incurred by Railroad, unless Railroad and a federal, state or local governmental entity have agreed that Railroad is to bill such expenses to the federal, state or local governmental entity. If Railroad will be sending the bills to Contractor, Contractor shall pay such bills within thirty (30) days of Contractor's receipt of billing. If Railroad performs any flagging, or other special protective or safety measures are performed by Railroad, Contractor agrees that Contractor is not relieved of any of its responsibilities or liabilities set forth in this Agreement.

B. The rate of pay per hour for each flagman will be the prevailing hourly rate in effect for an eight-hour day for the class of flagmen used during regularly assigned hours and overtime in accordance with Labor Agreements and Schedules in effect at the time the work is performed. In addition to the cost of such labor, a composite charge for vacation, holiday, health and welfare, supplemental sickness, Railroad Retirement and unemployment compensation, supplemental pension, Employees Liability and Property Damage and Administration will be included, computed on actual payroll. The composite charge will be the prevailing composite charge in effect at the time the work is performed. One and one-half times the current hourly rate is paid for overtime, Saturdays and Sundays, and two and one-half times current hourly rate for holidays. Wage rates are subject to change, at any time, by law or by agreement between Railroad and its employees, and may be retroactive as a result of negotiations or a ruling of an authorized governmental agency. Additional charges on labor are also subject to change. If the wage rate or additional charges are changed, Contractor (or the governmental entity, as applicable) shall pay on the basis of the new rates and charges.

C. Reimbursement to Railroad will be required covering the full eight-hour day during which any flagman is furnished, unless the flagman can be assigned to other Railroad work during a portion of such day, in which event reimbursement will not be required for the portion of the day during which the flagman is engaged in other Railroad work. Reimbursement will also be required for any day not actually worked by the flagman following the flagman's assignment to work on the project for which Railroad is required to pay the flagman and which could not reasonably be avoided by Railroad by assignment of such flagman to other work, even though Contractor may not be working during such time. When it becomes necessary for Railroad to bulletin and assign an employee to a flagging position in compliance with union collective bargaining agreements, Contractor must provide Railroad a minimum of thirty (30) days notice prior to the cessation of the need for a flagman. If thirty (30) days notice of cessation is not given, Contractor will still be required to pay flagging charges for the thirty (30) day notice period required by union agreement to be given to the employee, even though flagging is not required for that period. An additional ten (10) days notice must then be given to Railroad if flagging services are needed again after such five day cessation notice has been given to Railroad.

Section 2. LIMITATION AND SUBORDINATION OF RIGHTS GRANTED

A. The foregoing grant of right is subject and subordinate to the prior and continuing right and obligation of the Railroad to use and maintain its entire property including the right and power of Railroad to construct, maintain, repair, renew, use, operate, change, modify or relocate railroad tracks, roadways, signal, communication, fiber optics, or other wirelines, pipelines and other facilities upon, along or across any or all parts of its property, all or any of which may be freely done at any time or times by Railroad without liability to Contractor or to any other party for compensation or damages.

B. The foregoing grant is also subject to all outstanding superior rights (including those in favor of licensees and lessees of Railroad's property, and others) and the right of Railroad to renew and extend the same, and is made without covenant of title or for quiet enjoyment.

Section 3. NO INTERFERENCE WITH OPERATIONS OF RAILROAD AND ITS TENANTS.

A. Contractor shall conduct its operations so as not to interfere with the continuous and uninterrupted use and operation of the railroad tracks and property of Railroad, including without limitation, the operations of Railroad's lessees, licensees or others, unless specifically authorized in advance by the Railroad Representative. Nothing shall be done or permitted to be done by Contractor at any time that would in any manner impair the safety of such operations. When not in use, Contractor's machinery and materials shall be kept at least fifty (50) feet from the centerline of Railroad's nearest track, and there shall be no vehicular crossings of Railroads tracks except at existing open public crossings.

B. Operations of Railroad and work performed by Railroad personnel and delays in the work to be performed by Contractor caused by such railroad operations and work are expected by Contractor, and Contractor agrees that Railroad shall have no liability to Contractor, or any other person or entity for any such delays. The Contractor shall coordinate its activities with those of Railroad and third parties so as to avoid interference with railroad operations. The safe operation of Railroad train movements and other activities by Railroad takes precedence over any work to be performed by Contractor.

Section 4. LIENS.

Contractor shall pay in full all persons who perform labor or provide materials for the work to be performed by Contractor. Contractor shall not create, permit or suffer any mechanic's or materialmen's liens of any kind or nature to be created or enforced against any property of Railroad for any such work performed. **CONTRACTOR SHALL INDEMNIFY AND HOLD HARMLESS RAILROAD FROM AND AGAINST ANY AND ALL LIENS, CLAIMS, DEMANDS, COSTS OR EXPENSES OF WHATSOEVER NATURE IN ANY WAY CONNECTED WITH OR GROWING OUT OF SUCH WORK DONE, LABOR PERFORMED, OR MATERIALS FURNISHED. IF CONTRACTOR FAILS TO PROMPTLY CAUSE ANY LIEN TO BE RELEASED OF RECORD, RAILROAD MAY, AT ITS ELECTION, DISCHARGE THE LIEN OR CLAIM OF LIEN AT CONTRACTOR'S EXPENSE.**

Section 5. PROTECTION OF FIBER OPTIC CABLE SYSTEMS.

A. Fiber optic cable systems may be buried on Railroad's property. Protection of the fiber optic cable systems is of extreme importance since any break could disrupt service to users resulting in business interruption and loss of revenue and profits. Contractor shall telephone Railroad during normal business hours (7:00 a.m. to 9:00 p.m. Central Time, Monday through Friday, except holidays) at 1-800-336-9193 (also a 24-hour, 7-day number for emergency calls) to determine if fiber optic cable is buried anywhere on Railroad's property to be used by Contractor. If it is, Contractor will telephone the telecommunications company(ies) involved, make arrangements for a cable locator and, if applicable, for relocation or other protection of the fiber optic cable. Contractor shall not commence any work until all such protection or relocation (if applicable) has been accomplished.

B. **IN ADDITION TO OTHER INDEMNITY PROVISIONS IN THIS AGREEMENT, CONTRACTOR SHALL INDEMNIFY, DEFEND AND HOLD RAILROAD HARMLESS FROM AND AGAINST ALL COSTS, LIABILITY AND EXPENSE WHATSOEVER (INCLUDING, WITHOUT LIMITATION, ATTORNEYS' FEES, COURT COSTS AND EXPENSES) ARISING OUT OF ANY ACT OR OMISSION OF CONTRACTOR, ITS AGENTS AND/OR EMPLOYEES, THAT CAUSES OR CONTRIBUTES TO (1) ANY DAMAGE TO OR DESTRUCTION OF ANY TELECOMMUNICATIONS SYSTEM ON RAILROAD'S PROPERTY, AND/OR (2) ANY INJURY TO OR DEATH OF ANY PERSON EMPLOYED BY OR ON BEHALF OF ANY TELECOMMUNICATIONS COMPANY, AND/OR ITS CONTRACTOR, AGENTS AND/OR EMPLOYEES, ON RAILROAD'S PROPERTY. CONTRACTOR SHALL NOT HAVE OR SEEK RECOURSE AGAINST RAILROAD FOR ANY CLAIM OR CAUSE OF ACTION FOR ALLEGED LOSS OF PROFITS OR REVENUE OR LOSS OF SERVICE OR OTHER CONSEQUENTIAL DAMAGE TO A TELECOMMUNICATION COMPANY USING RAILROAD'S PROPERTY OR A CUSTOMER OR USER OF SERVICES OF THE FIBER OPTIC CABLE ON RAILROAD'S PROPERTY.**

Section 6. PERMITS - COMPLIANCE WITH LAWS.

In the prosecution of the work covered by this Agreement, Contractor shall secure any and all necessary permits and shall comply with all applicable federal, state and local laws, regulations and enactments affecting the work including, without limitation, all applicable Federal Railroad Administration regulations.

Section 7. SAFETY.

A. Safety of personnel, property, rail operations and the public is of paramount importance in the prosecution of the work performed by Contractor. Contractor shall be responsible for initiating, maintaining and supervising all safety, operations and programs in connection with the work. Contractor shall at a minimum comply with Railroad's safety standards listed in **Exhibit D**, hereto attached, to ensure uniformity with the safety standards followed by Railroad's own forces. As a part of Contractor's safety responsibilities, Contractor shall notify Railroad if Contractor determines that any of Railroad's safety standards are contrary to good safety practices. Contractor shall furnish copies of **Exhibit D** to each of its employees before they enter the job site.

B. Without limitation of the provisions of paragraph A above, Contractor shall keep the job site free from safety and health hazards and ensure that its employees are competent and adequately trained in all safety and health aspects of the job.

C. Contractor shall have proper first aid supplies available on the job site so that prompt first aid services may be provided to any person injured on the job site. Contractor shall promptly notify Railroad of any U.S. Occupational Safety and Health Administration reportable injuries. Contractor shall have a nondelegable duty to control its employees while they are on the job site or any other property of Railroad, and to be certain they do not use, be under the influence of, or have in their possession any alcoholic beverage, drug or other substance that may inhibit the safe performance of any work.

D. If and when requested by Railroad, Contractor shall deliver to Railroad a copy of Contractor's safety plan for conducting the work (the "Safety Plan"). Railroad shall have the right, but not the obligation, to require Contractor to correct any deficiencies in the Safety Plan. The terms of this Agreement shall control if there are any inconsistencies between this Agreement and the Safety Plan.

Section 8. INDEMNITY.

A. TO THE EXTENT NOT PROHIBITED BY APPLICABLE STATUTE, CONTRACTOR SHALL INDEMNIFY, DEFEND AND HOLD HARMLESS RAILROAD, ITS AFFILIATES, AND ITS AND THEIR OFFICERS, AGENTS AND EMPLOYEES ("INDEMNIFIED PARTIES") FROM AND AGAINST ANY AND ALL LOSS, DAMAGE, INJURY, LIABILITY, CLAIM, DEMAND, COST OR EXPENSE (INCLUDING, WITHOUT LIMITATION, ATTORNEY'S, CONSULTANT'S AND EXPERT'S FEES, AND COURT COSTS), FINE OR PENALTY (COLLECTIVELY, "LOSS") INCURRED BY ANY PERSON (INCLUDING, WITHOUT LIMITATION, ANY INDEMNIFIED PARTY, CONTRACTOR, OR ANY EMPLOYEE OF CONTRACTOR OR OF ANY INDEMNIFIED PARTY) ARISING OUT OF OR IN ANY MANNER CONNECTED WITH (I) ANY WORK PERFORMED BY CONTRACTOR, OR (II) ANY ACT OR OMISSION OF CONTRACTOR, ITS OFFICERS, AGENTS OR EMPLOYEES, OR (III) ANY BREACH OF THIS AGREEMENT BY CONTRACTOR.

B. THE RIGHT TO INDEMNITY UNDER THIS SECTION 8 SHALL ACCRUE UPON OCCURRENCE OF THE EVENT GIVING RISE TO THE LOSS, AND SHALL APPLY REGARDLESS OF ANY NEGLIGENCE OR STRICT LIABILITY OF ANY INDEMNIFIED PARTY, EXCEPT WHERE THE LOSS IS CAUSED BY THE SOLE ACTIVE NEGLIGENCE OF AN INDEMNIFIED PARTY AS ESTABLISHED BY THE FINAL JUDGMENT OF A COURT OF COMPETENT JURISDICTION. THE SOLE ACTIVE NEGLIGENCE OF ANY INDEMNIFIED PARTY SHALL NOT BAR THE RECOVERY OF ANY OTHER INDEMNIFIED PARTY.

C. CONTRACTOR EXPRESSLY AND SPECIFICALLY ASSUMES POTENTIAL LIABILITY UNDER THIS SECTION 8 FOR CLAIMS OR ACTIONS BROUGHT BY CONTRACTOR'S OWN EMPLOYEES. CONTRACTOR WAIVES ANY IMMUNITY IT MAY HAVE UNDER WORKER'S COMPENSATION OR INDUSTRIAL INSURANCE ACTS TO INDEMNIFY RAILROAD UNDER THIS SECTION 8. CONTRACTOR ACKNOWLEDGES THAT THIS WAIVER WAS MUTUALLY NEGOTIATED BY THE PARTIES HERETO.

D. NO COURT OR JURY FINDINGS IN ANY EMPLOYEE'S SUIT PURSUANT TO ANY WORKER'S COMPENSATION ACT OR THE FEDERAL EMPLOYERS' LIABILITY ACT AGAINST A PARTY TO THIS AGREEMENT MAY BE RELIED UPON OR USED BY CONTRACTOR IN ANY ATTEMPT TO ASSERT LIABILITY AGAINST RAILROAD.

E. **THE PROVISIONS OF THIS SECTION 8 SHALL SURVIVE THE COMPLETION OF ANY WORK PERFORMED BY CONTRACTOR OR THE TERMINATION OR EXPIRATION OF THIS AGREEMENT. IN NO EVENT SHALL THIS SECTION 8 OR ANY OTHER PROVISION OF THIS AGREEMENT BE DEEMED TO LIMIT ANY LIABILITY CONTRACTOR MAY HAVE TO ANY INDEMNIFIED PARTY BY STATUTE OR UNDER COMMON LAW.**

Section 9. RESTORATION OF PROPERTY.

In the event Railroad authorizes Contractor to take down any fence of Railroad or in any manner move or disturb any of the other property of Railroad in connection with the work to be performed by Contractor, then in that event Contractor shall, as soon as possible and at Contractor's sole expense, restore such fence and other property to the same condition as the same were in before such fence was taken down or such other property was moved or disturbed. Contractor shall remove all of Contractor's tools, equipment, rubbish and other materials from Railroad's property promptly upon completion of the work, restoring Railroad's property to the same state and condition as when Contractor entered thereon.

Section 10. WAIVER OF DEFAULT.

Waiver by Railroad of any breach or default of any condition, covenant or agreement herein contained to be kept, observed and performed by Contractor shall in no way impair the right of Railroad to avail itself of any remedy for any subsequent breach or default.

Section 11. MODIFICATION - ENTIRE AGREEMENT.

No modification of this Agreement shall be effective unless made in writing and signed by Contractor and Railroad. This Agreement and the exhibits attached hereto and made a part hereof constitute the entire understanding between Contractor and Railroad and cancel and supersede any prior negotiations, understandings or agreements, whether written or oral, with respect to the work to be performed by Contractor.

Section 12. ASSIGNMENT - SUBCONTRACTING.

Contractor shall not assign or subcontract this Agreement, or any interest therein, without the written consent of the Railroad. Contractor shall be responsible for the acts and omissions of all subcontractors. Before Contractor commences any work, the Contractor shall, except to the extent prohibited by law; (1) require each of its subcontractors to include the Contractor as "Additional Insured" in the subcontractor's Commercial General Liability policy and Business Automobile policies with respect to all liabilities arising out of the subcontractor's performance of work on behalf of the Contractor by endorsing these policies with ISO Additional Insured Endorsements CG 20 26, and CA 20 48 (or substitute forms providing equivalent coverage; (2) require each of its subcontractors to endorse their Commercial General Liability Policy with "Contractual Liability Railroads" ISO Form CG 24 17 10 01 (or a substitute form providing equivalent coverage) for the job site; and (3) require each of its subcontractors to endorse their Business Automobile Policy with "Coverage For Certain Operations In Connection With Railroads" ISO Form CA 20 70 10 01 (or a substitute form providing equivalent coverage) for the job site.

EXHIBIT C

TO CONTRACTOR'S RIGHT OF ENTRY AGREEMENT

INSURANCE REQUIREMENTS

Contractor shall, at its sole cost and expense, procure and maintain during the course of the Project and until all Project work on Railroad's property has been completed and the Contractor has removed all equipment and materials from Railroad's property and has cleaned and restored Railroad's property to Railroad's satisfaction, the following insurance coverage:

A. **COMMERCIAL GENERAL LIABILITY INSURANCE**. Commercial general liability (CGL) with a limit of not less than $2,000,000 each occurrence and an aggregate limit of not less than $2,000,000. CGL insurance must be written on ISO occurrence form CG 00 01 12 04 (or a substitute form providing equivalent coverage).

The policy must also contain the following endorsement, which must be stated on the certificate of insurance:
- Contractual Liability Railroads ISO form CG 24 17 10 01 (or a substitute form providing equivalent coverage) showing "Union Pacific Railroad Company Property" as the Designated Job Site.
- Designated Construction Project(s) General Aggregate Limit ISO Form CG 25 03 03 97 (or a substitute form providing equivalent coverage) showing the project on the form schedule.

B. **BUSINESS AUTOMOBILE COVERAGE INSURANCE**. Business auto coverage written on ISO form CA 00 01 (or a substitute form providing equivalent liability coverage) with a combined single limit of not less $2,000,000 for each accident.

The policy must contain the following endorsements, which must be stated on the certificate of insurance:
- Coverage For Certain Operations In Connection With Railroads ISO form CA 20 70 10 01 (or a substitute form providing equivalent coverage) showing "Union Pacific Property" as the Designated Job Site.
- Motor Carrier Act Endorsement - Hazardous materials clean up (MCS-90) if required by law.

C. **WORKERS' COMPENSATION AND EMPLOYERS' LIABILITY INSURANCE**. Coverage must include but not be limited to:
- Contractor's statutory liability under the workers' compensation laws of the State of Texas.
- Employers' Liability (Part B) with limits of at least $500,000 each accident, $500,000 disease policy limit $500,000 each employee.

If Contractor is self-insured, evidence of state approval and excess workers compensation coverage must be provided. Coverage must include:
- liability arising out of the U. S. Longshoremen's and Harbor Workers' Act, the Jones Act, and
- the Outer Continental Shelf Land Act, if applicable.

The policy must contain the following endorsement, which must be stated on the certificate of insurance:
- Alternate Employer endorsement ISO form WC 00 03 01 A (or a substitute form providing equivalent coverage) showing Railroad in the schedule as the alternate employer (or a substitute form providing equivalent coverage).

D. **RAILROAD PROTECTIVE LIABILITY INSURANCE**. Contractor must maintain Railroad Protective Liability insurance written on ISO occurrence form CG 00 35 12 04 (or a substitute form providing equivalent coverage) on behalf of Railroad as named insured, with a limit of not less than $2,000,000 per occurrence and an aggregate of $6,000,000. A binder stating the policy is in place must be submitted to Railroad before the work may be commenced and until the original policy is forwarded to Railroad.

E. **UMBRELLA OR EXCESS INSURANCE**. If Contractor utilizes umbrella or excess policies, these policies must "follow form" and afford no less coverage than the primary policy.

F. **POLLUTION LIABILITY INSURANCE**. Pollution liability coverage must be written on ISO form Pollution Liability Coverage Form Designated Sites CG 00 39 12 04 (or a substitute form providing equivalent liability coverage), with limits of at least $5,000,000 per occurrence and an aggregate limit of $10,000,000.

If the scope of work as defined in this Agreement includes the disposal of any hazardous or non-hazardous materials fn

the job site, Contractor must furnish to Railroad evidence of pollution legal liability insurance maintained by the disposal site operator for losses arising from the insured facility accepting the materials, with coverage in minimum amounts of $1,000,000 per loss, and an annual aggregate of $2,000,000.

OTHER REQUIREMENTS

G. All policy(ies) required above (except worker's compensation and employers liability) must include Railroad as "Additional Insured" using ISO Additional Insured Endorsements CG 20 26, and CA 20 48 (or substitute forms providing equivalent coverage). The coverage provided to Railroad as additional insured shall, to the extent provided under ISO Additional Insured Endorsement CG 20 26, and CA 20 48 provide coverage for Railroad's negligence whether sole or partial, active or passive, and shall not be limited by Contractor's liability under the indemnity provisions of this Agreement.

H. Punitive damages exclusion, if any, must be deleted (and the deletion indicated on the certificate of insurance), unless the law governing this Agreement prohibits all punitive damages that might arise under this Agreement.

I. Contractor waives all rights of recovery, and its insurers also waive all rights of subrogation of damages against Railroad and its agents, officers, directors and employees. This waiver must be stated on the certificate of insurance.

J. Prior to commencing the work, Contractor shall furnish Railroad with a certificate(s) of insurance, executed by a duly authorized representative of each insurer, showing compliance with the insurance requirements in this Agreement.

K. All insurance policies must be written by a reputable insurance company acceptable to Railroad or with a current Best's Insurance Guide Rating of A- and Class VII or better, and authorized to do business in the State of Texas.

L. The fact that insurance is obtained by Contractor or by Railroad on behalf of Contractor will not be deemed to release or diminish the liability of Contractor, including, without limitation, liability under the indemnity provisions of this Agreement. Damages recoverable by Railroad from Contractor or any third party will not be limited by the amount of the required insurance coverage.

EXHIBIT D

TO CONTRACTOR'S RIGHT OF ENTRY AGREEMENT

MINIMUM SAFETY REQUIREMENTS

The term "employees" as used herein refer to all employees of Contractor as well as all employees of any subcontractor or agent of Contractor.

I. CLOTHING

A. All employees of Contractor will be suitably dressed to perform their duties safely and in a manner that will not interfere with their vision, hearing, or free use of their hands or feet.

Specifically, Contractor's employees must wear:

(i) Waist-length shirts with sleeves.
(ii) Trousers that cover the entire leg. If flare-legged trousers are worn, the trouser bottoms must be tied to prevent catching.
(iii) Footwear that covers their ankles and has a defined heel. Employees working on bridges are required to wear safety-toed footwear that conforms to the American National Standards Institute (ANSI) and FRA footwear requirements.

B. Employees shall not wear boots (other than work boots), sandals, canvas-type shoes, or other shoes that have thin soles or heels that are higher than normal.

C. Employees must not wear loose or ragged clothing, neckties, finger rings, or other loose jewelry while operating or working on machinery.

II. PERSONAL PROTECTIVE EQUIPMENT

Contractor shall require its employees to wear personal protective equipment as specified by Railroad rules, regulations, or recommended or requested by the Railroad Representative.

(i) Hard hat that meets the American National Standard (ANSI) Z89.1 – latest revision. Hard hats should be affixed with Contractor's company logo or name.
(ii) Eye protection that meets American National Standard (ANSI) for occupational and educational eye and face protection, Z87.1 – latest revision. Additional eye protection must be provided to meet specific job situations such as welding, grinding, etc.
(iii) Hearing protection, which affords enough attenuation to give protection from noise levels that will be occurring on the job site. Hearing protection, in the form of plugs or muffs, must be worn when employees are within:

- 100 feet of a locomotive or roadway/work equipment
- 15 feet of power operated tools
- 150 feet of jet blowers or pile drivers
- 150 feet of retarders in use (when within 10 feet, employees must wear dual ear protection – plugs and muffs)

(iv) Other types of personal protective equipment, such as respirators, fall protection equipment, and face shields, must be worn as recommended or requested by the Railroad Representative.

III. ON TRACK SAFETY

Contractor is responsible for compliance with the Federal Railroad Administration's Roadway Worker Protection regulations – 49CFR214, Subpart C and Railroad's On-Track Safety rules. Under 49CFR214, Subpart C, railroad contractors are responsible for the training of their employees on such regulations. In addition to the instructions contained in Roadway Worker Protection regulations, all employees must:

(i) Maintain a distance of twenty-five (25) feet to any track unless the Railroad Representative is present to authorize movements.

(ii) Wear an orange, reflectorized workwear approved by the Railroad Representative.
(iii) Participate in a job briefing that will specify the type of On-Track Safety for the type of work being performed. Contractor must take special note of limits of track authority, which tracks may or may not be fouled, and clearing the track. Contractor will also receive special instructions relating to the work zone around machines and minimum distances between machines while working or traveling.

IV. EQUIPMENT

A. It is the responsibility of Contractor to ensure that all equipment is in a safe condition to operate. If, in the opinion of the Railroad Representative, any of Contractor's equipment is unsafe for use, Contractor shall remove such equipment from Railroad's property. In addition, Contractor must ensure that the operators of all equipment are properly trained and competent in the safe operation of the equipment. In addition, operators must be:

- Familiar and comply with Railroad's rules on lockout/tagout of equipment.
- Trained in and comply with the applicable operating rules if operating any hy-rail equipment on-track.
- Trained in and comply with the applicable air brake rules if operating any equipment that moves rail cars or any other railbound equipment.

B. All self-propelled equipment must be equipped with a first-aid kit, fire extinguisher, and audible back-up warning device.

C. Unless otherwise authorized by the Railroad Representative, all equipment must be parked a minimum of twenty-five (25) feet from any track. Before leaving any equipment unattended, the operator must stop the engine and properly secure the equipment against movement.

D. Cranes must be equipped with three orange cones that will be used to mark the working area of the crane and the minimum clearances to overhead powerlines.

V. GENERAL SAFETY REQUIREMENTS

A. Contractor shall ensure that all waste is properly disposed of in accordance with applicable federal and state regulations.

B. Contractor shall ensure that all employees participate in and comply with a job briefing conducted by the Railroad Representative, if applicable. During this briefing, the Railroad Representative will specify safe work procedures, (including On-Track Safety) and the potential hazards of the job. If any employee has any questions or concerns about the work, the employee must voice them during the job briefing. Additional job briefings will be conducted during the work as conditions, work procedures, or personnel change.

C. All track work performed by Contractor meets the minimum safety requirements established by the Federal Railroad Administration's Track Safety Standards 49CFR213.

D. All employees comply with the following safety procedures when working around any railroad track:

(i) Always be on the alert for moving equipment. Employees must always expect movement on any track, at any time, in either direction.
(ii) Do not step or walk on the top of the rail, frog, switches, guard rails, or other track components.
(iii) In passing around the ends of standing cars, engines, roadway machines or work equipment, leave at least 20 feet between yourself and the end of the equipment. Do not go between pieces of equipment of the opening is less than one car length (50 feet).
(iv) Avoid walking or standing on a track unless so authorized by the employee in charge.
(v) Before stepping over or crossing tracks, look in both directions first.
(vi) Do not sit on, lie under, or cross between cars except as required in the performance of your duties and only when track and equipment have been protected against movement.

E. All employees must comply with all federal and state regulations concerning workplace safety.